T.P. OFFICE COPY
BOROUGH OF WORTHING
DEPOSITED 28/1/09
TP. REF. No.
WB/ 09/0067/FULL

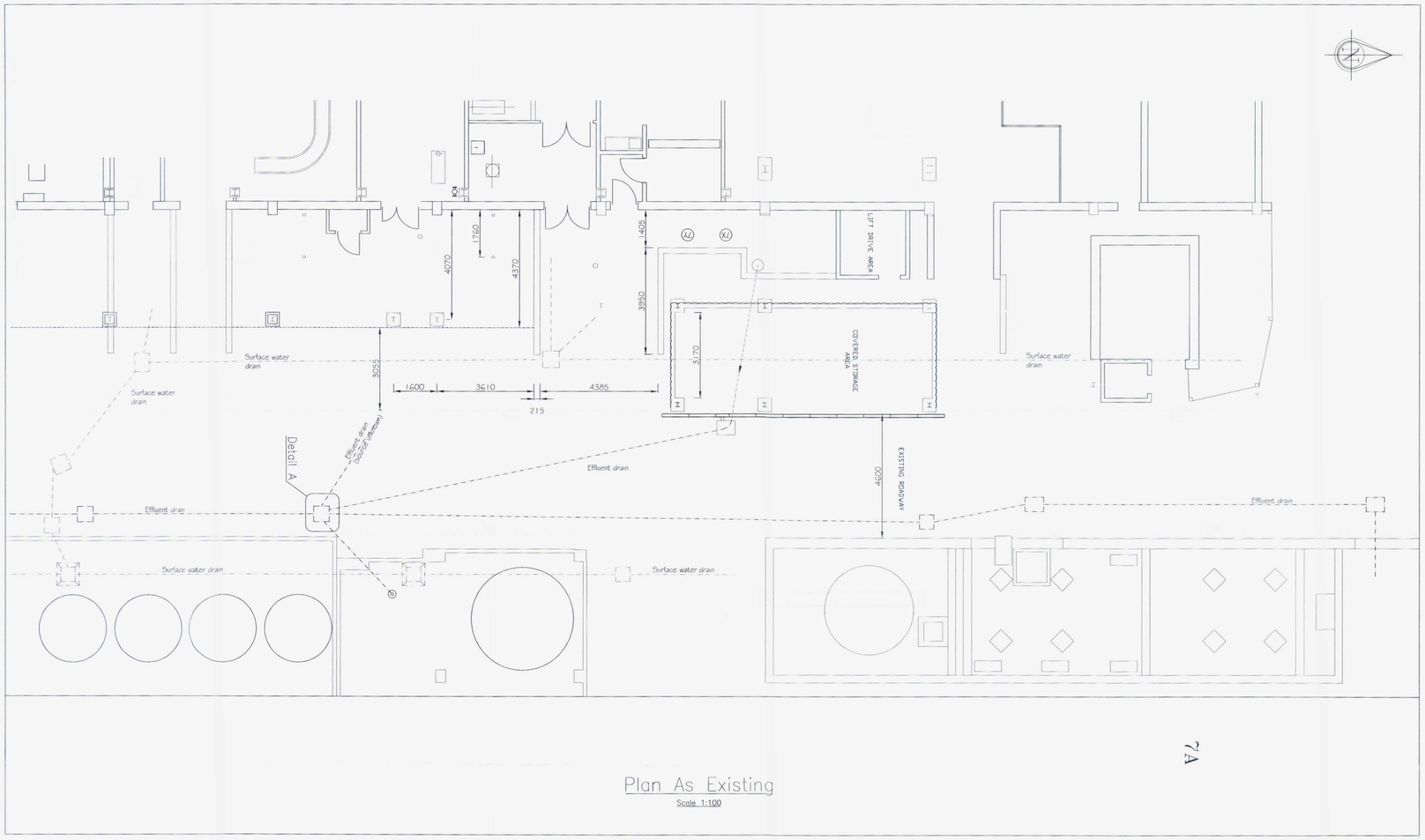

Plan As Existing
Scale 1:100

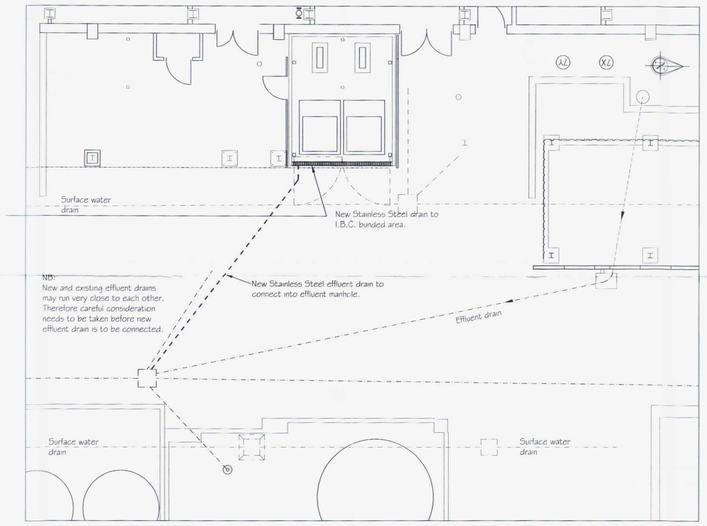

Plan As Proposed
Scale 1:100

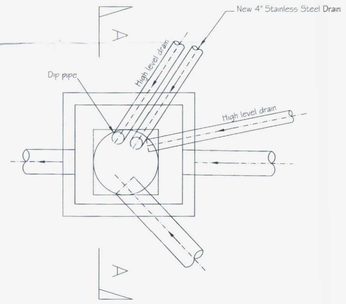

Detail A
Scale 1:25

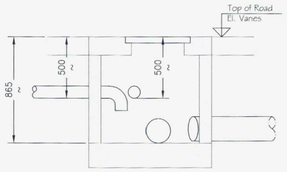

Section A – A
Scale 1:25

DESIGN & BUILD
TENDER ISSUE

WORTHING BOROUGH COUNCIL
23 MAR 2009
CONSENT GRANTED
SUBJECT TO CONDITIONS

GlaxoSmithKline

TITLE:
DRAINAGE DETAILS FOR NEW BARN AND INTERMEDIATE BULK CONTAINER OUTSIDE BUILDING 6E

DRG. TYPE: LAYOUT
SCALE: 1:100, 1:50 & 1:25
DATE: APRIL 2008
JOB No: GB12-08-0018
DRAWN BY: CP

DRAWING No. B.6E.0117
SHEET 2 OF 2
STATUS: PROPOSAL
REV: B

REV.	DATE	DESCRIPTION	BY	CHK.D	APP.D
B	9.6.08	DRAWING LAYOUT CHANGED	rjp		
A	09:05:08	ISSUED FOR SCHEME APPROVAL	CP		

This drawing is confidential and The property of GlaxoSmithKline It must not be copied Reproduced or lent to Third parties without written Authority first being obtained