Name: Miss Emma Sexton

Address: Flat 7, Elm Grove House, Elm Grove, Lancing, West Sussex, BN15 8PD

Installation details

- Remove and dispose of existing and supply and install new frames as shown below
- White (to both sides) Upvc windows
- White locking handles to windows
- Double glazed 'A' rated units using clear glass, using toughened where required
- Egress fire escape hinges where required
- Trickle vents are now added to all frames so that they adhere to the doc 'L' guidelines. Trickle vents help to keep the air in our homes fresh and clean, as well as keeping condensation out and lowering humidity in a room.
- All items viewed externally and arrow points to hinged side

Location	Details
Lounge window	Sized 1 @ 2370 x 1210. 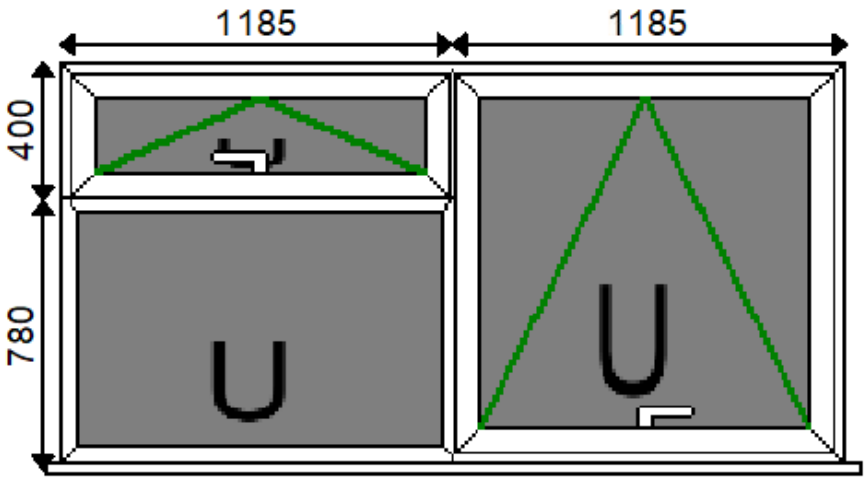
Kitchen window	Sized 1 @ 1190 x 1070. 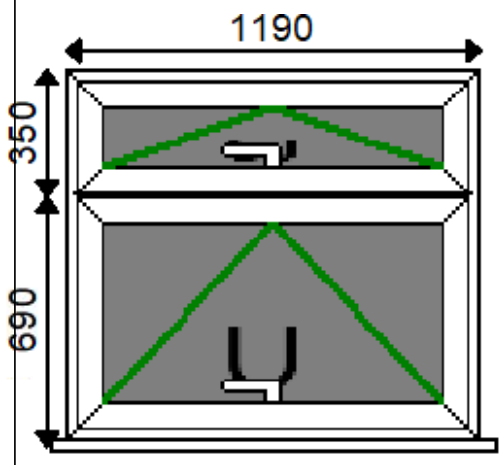

Location	Details
Bedroom window	Sized 1 @ 1790 x 1210. 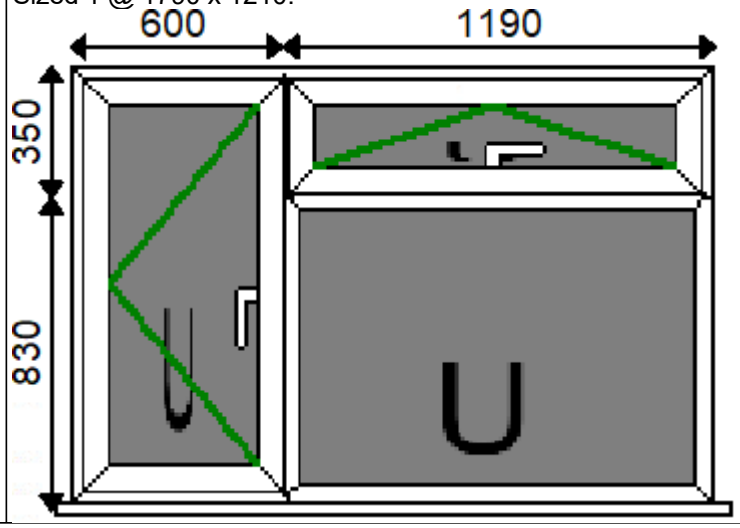

Platinum NRG - PVCu SlimSash 70mm Casement Windows



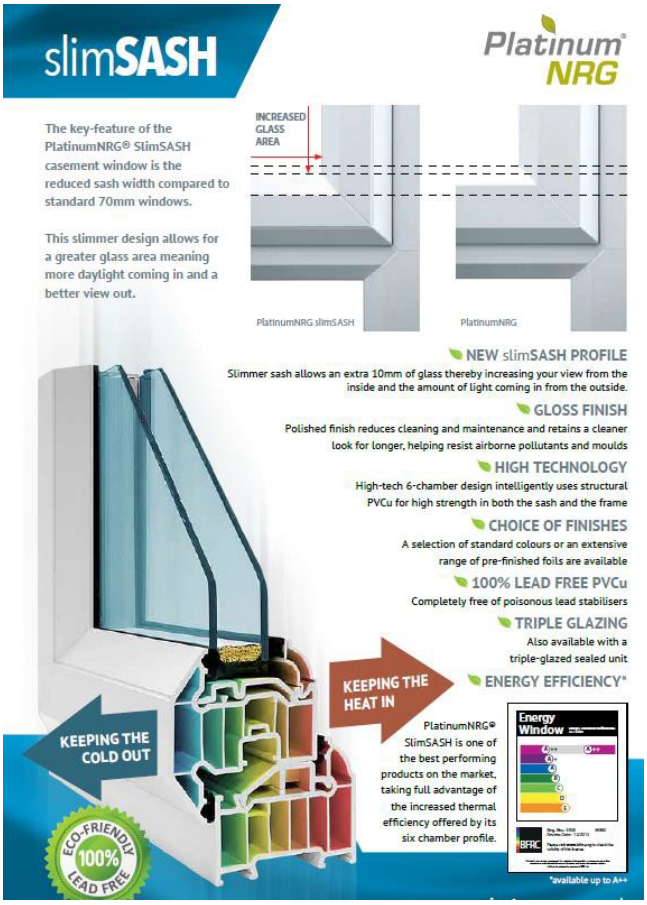

Chamfered bead comes as standard.

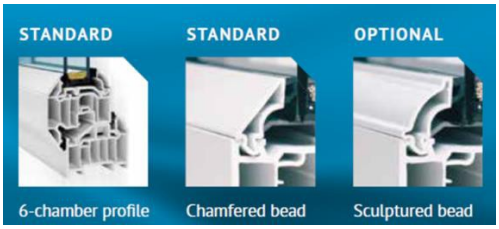

Easy clean hinges come as standard on side hung openers



Handles come in white as standard.

Please note – Items are viewed externally. Sizes / Costs are approx and subject to site survey with regards to available styles etc. **All images shown are for illustration purposes only** and are not intended to be relied upon as they may not be an exact representation of the product, unless otherwise stated. If installations are stated as new fit into prepared openings, we assume that the internal aspects are being plastered up to therefore no trimming has been allowed for. If this is required it can be costed on site survey. All glass has been allowed for as clear 'a' rated glass with toughened where required. Access equipment (unless stated) has not been allowed for, we can provide costs if access equipment is required.

We ensure all waste is disposed of responsibly and our **waste transfer certificate** is available upon request. We clean down glass and frames before we leave site and any issues with installation / will need to be advised within 24hrs.

We are a FENSA registered member (16737) employing our own dedicated fitting teams, which means as soon as your new frame installation/s have been completed and payment received we will send you our 10- year guarantee which is also insurance backed by the Glass and Glazing Federation.