All work to comply with building regulations and planning consent.
Workmanship and materials to comply with British standards and code of practice.
Scaled dimensions are approximate, take exact dimensions from site.
This drawing was prepared for local authority approval and not as a working drawing.
LOCAL AUTHORITY MAY SCALE THE DRAWING
Any deviation from the drawing to be agreed with the local authority.
Any queries to be agreed prior to construction.
See separate details for Structural engineers calculations.

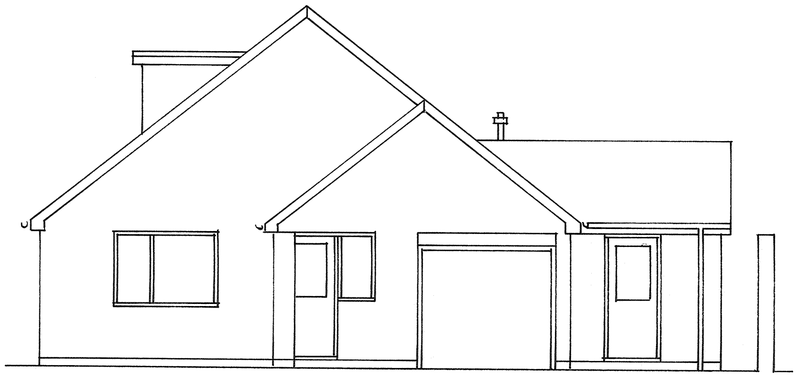

FRONT ELEVATION (SOUTH) 1:50 AT A1

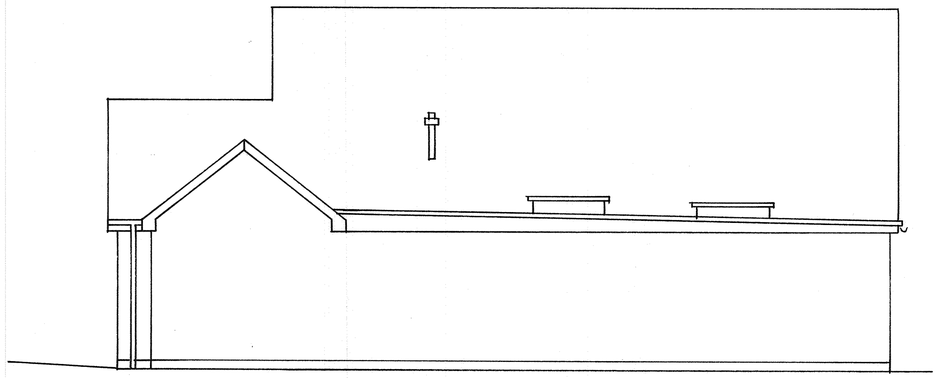

SIDE ELEVATION (EAST) 1:50 AT A1

ALL EXTERNAL WALLS TO BE RENDERED.

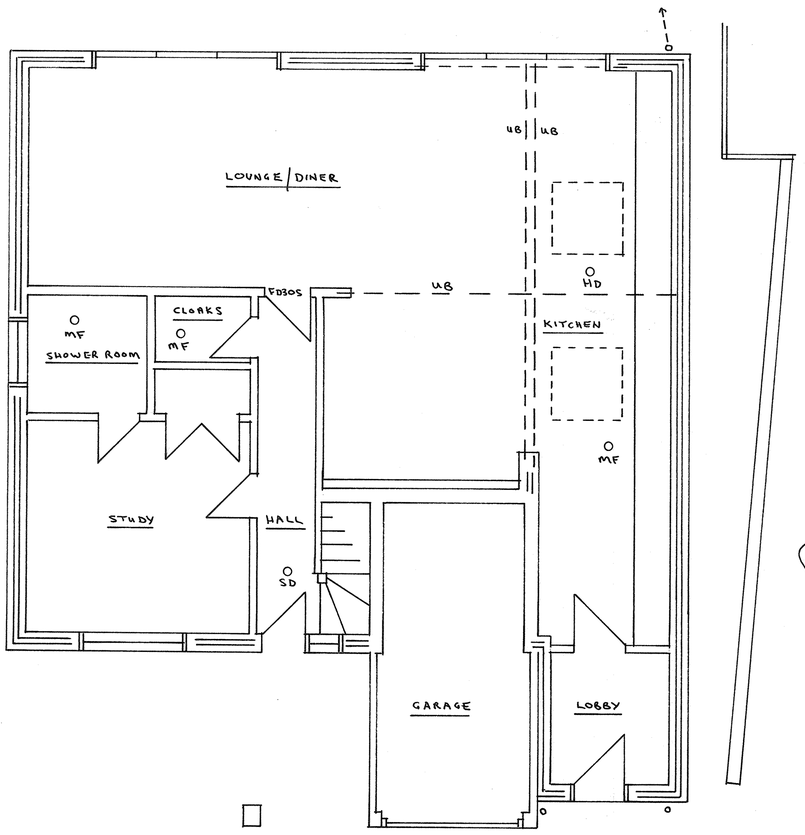

GROUND FLOOR PLAN 1:50 AT A1

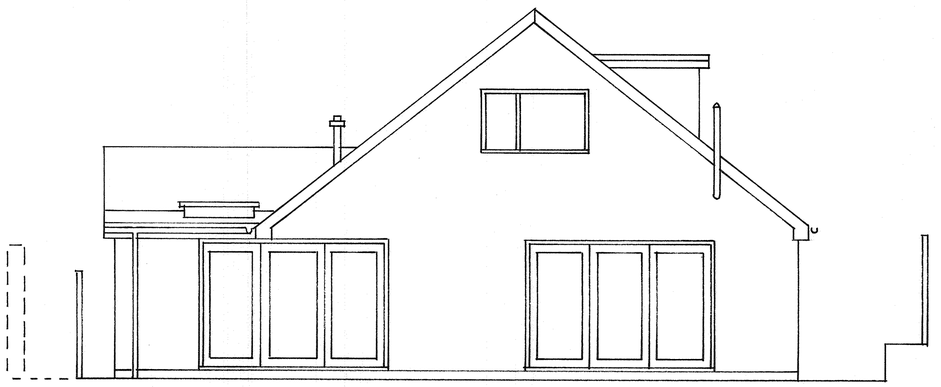

REAR ELEVATION (NORTH) 1:50 AT A1

0 1 2 1-50 3 4 5
0 1 2 1-100 4 6 8 10

Tony Standing Designs
Drawing for Domestic Extensions

Title	PROPOSED SIDE ELEVATION EXTENSION AT 1 WINSTON ROAD, LANCING. BN15 8SL.				
Client	MR. J. PHILLIPS.				
Drawn By: Date	TS JUNE 2022	Drawing Revision	C1083-2 A	Scale	AS SHOWN
Mr A J G Standing 4 Coombe Road, Steyning BN44 3LF	Phone: 01903 814151 / 07595 277995				

Sheet Size A1