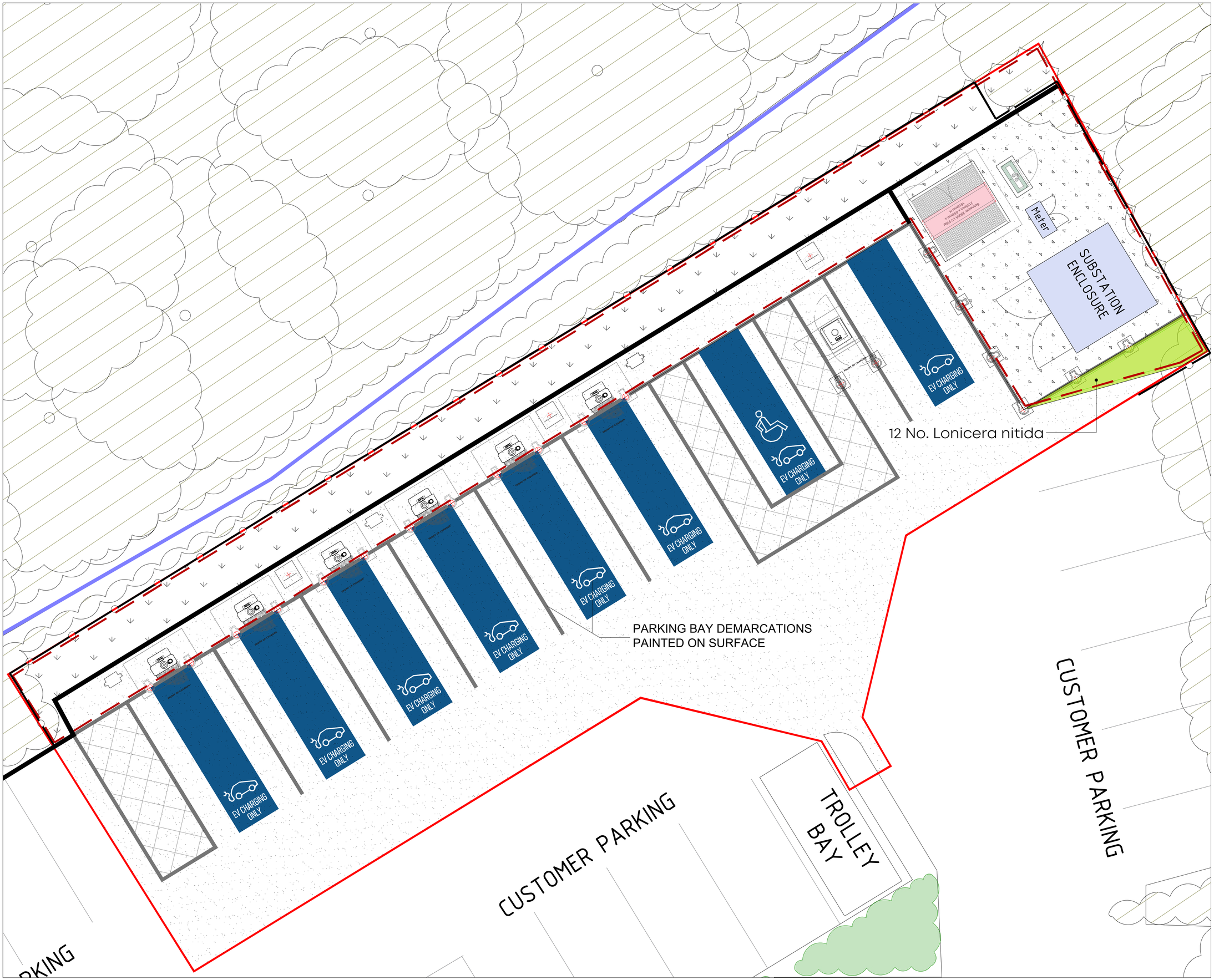

Site Boundary

Soft Landscape Proposals

- Removed Vegetation
- Retained Trees/Vegetation
- Proposed Shrub Planting
- Proposed Amenity Grass (Turf)

Hard Landscape Proposals

- Asphalt
- Concrete Slab
- New HB2 Kerb Line
  Half Battered Straight Kerb
  125x225mm

Tree Protection

- Tree Protection Fencing

Rev	Comment	Date
b	Layout Update	21.09.23
a	Area of concrete extended	11.09.23

N

0m 2m

LAIRD BAILEY LANDSCAPE ARCHITECTS

LAIRD BAILEY LANDSCAPE ARCHITECTS
t: 0330 043 4883
e: hello@lbla.co.uk
Costwolds | Somerset | South Wales | Kent

Client: bp pulse

Project Title:

M&S Shoreham

Drawing Title:

Hard & Soft Landscape Proposals (Sheet 1 of 2)

Date: 31 August 2023
Drawing Number: 401_LBD01
Scale: 1:50 at A1
Status: Final

Drawn By: AL
Checked by: DB
Revision: B
Use: Planning

SPECIFICATION NOTES GENERAL

- Proposals to be read in conjunction with Architects and Engineers Drawings;
- All landscape operations to be in accordance with all relevant and current BS and BS EN standards including BS2014, BS4428: 1989 & BS 3936: 1990,1992,2007; and all amendments to date.
- Plant material to conform with the National Plant Specification;
- All stock (other than container grown) shall be planted between November 30th and 28th February. Planting operations shall be carried out in suitable open weather and all plants re-firmed if lifted by frost during the contract. No planting shall take place in dry, hot and sunny weather or indeed if frost and snow are present, or in cold east winds, regardless of the stock specified;
- Any plant material planted outside the recognised planting season (Nov-Feb), to be containerised stock and supplied at the sizes specified;
- Plant handling and planting operations to be in accordance with HTA "Handling and Establishing Landscape Plants parts I - III;
- All planting to be maintained and guaranteed for 5 years to include watering, weeding, litter picking, pest & disease control;
- The landscape contractor is to take all safety precautions to prevent any injury to any persons. The landscape contractor shall comply with the requirements of the Health and Safety at Work Act 1974 and current Construction, Design and Management Regulations.

EXISTING TREES AND SHRUBS

- Where existing trees and shrubs are to be retained they will be subject to a full Arboricultural inspection for safety;
- Any surgery required shall be in accordance with BS3998: 2010 'Tree Work - Recommendations';
- All existing trees and hedges to be retained are subject to BS5837: 2012 'Trees in relation to Construction - Recommendations', and should be fully fenced off in accordance, prior to the commencement of any works;
- No storage of materials, disposal of rubbish, fires, spillage of oil and chemicals, ground compaction, excavation or changes in level shall be carried out within existing tree/hedge canopies or their Root Protection Areas;
- The contractor shall maintain protective fencing around retained trees and hedgerows until all site works are completed. The contractor will then remove the fencing and reinstate the ground maintaining all existing levels;
- All works shall comply fully with an Arboricultural Method Statement.

PROPOSED SHRUBS

- Before planting, remove any non-perishable containers and carefully prune any damaged roots. Plant upright or well balanced with best side to front. Carefully return excavated topsoil/shrub planting compost mix, packing around evenly spread roots or root ball and heel well in;
- Planting holes for shrubs to be 150mm wider than root spread and 450mm deep.
- Water plants thoroughly immediately after planting;
- Immediately after planting cut back any damaged, dead or diseased branches;
- After planting rake soil to a fine tilth with approved cambers and no hollows;
- After raking apply approved bark mulch to a depth of 75mm.

PROPOSED TURF

- Lay turf in Autumn or early winter. Laying turf outside of these time-scales is possible but shall require adequate maintenance. Summer turf to be delivered in batches (the amount that can be realistically laid in any one day) and kept moist;
- Spring and summer: Lay within 16 hours of delivery. Autumn and winter: Lay within 24 hours of delivery;
- Do not lay turf when persistent cold or drying winds are likely to occur or soil is frost bound, waterlogged or excessively dry;
- If there is risk of frost in winter, turf should be adequately covered with Hessian sheeting or tarpaulin;
- Remove high spots and fill hollows with fine soil. Any inequalities in finished levels owing to variation in turf thickness or uneven of soil shall conform to the levels indicated, allowing for final settlement;
- Dressing, brushed well in to completely fill all joints: For amenity turf a dressing of finely sifted topsoil (complying with BS 3882:2015) shall be applied and well brushed into the joints;
- On completion of turfing, the whole of the turfed areas shall be top dressed to a depth of 10mm with fine sifted soil, and well brushed in; and
- The Landscape Sub-Contractor shall provide means of watering turfed areas from an approved source for the duration of the contract, as agreed with the Contract Administrator. The Landscape Sub-Contractor shall be responsible for determining dry periods and extent of watering necessary and any plant failures due to drought, following failure to provide notification of dry periods.

SOIL AND MULCH

- Existing topsoil to be stripped and stored on site in heaps not exceeding 2m height and kept weed free;
- Any compacted subsoil to be broken up to allow free drainage and to enable topsoil to key into surface;
- Any imported topsoil to be to BS3882:2015, weed free, medium texture, neutral PH value, reasonably stone free with no stones over 20mm in size;
- Finished topsoil levels to be flush with adjacent paved surfaces;
- Soil depths to be 900mm for 450mm for shrub and hedge planting and 300mm for turf.
- All planting areas to be covered with a 75mm depth of medium grade bark mulch.

PLANT MATERIAL TREATMENT

- All to be British grown stock and fully hardened off;
- Root Dip - Proprietary Root Dip applied to all bare root stock at time of lifting at nursery and prior to planting (for hedgerow plants); and
- Anti-Desiccant - Proprietary anti-desiccant to be applied to foliage of all containerised/rootballed material in leaf prior to transportation and during any delay in planting.

WATERING

- Planting areas are to be brought up to field capacity on completion of planting and during maintenance visits subject to prevailing conditions.

WEEDING AND LITTER CLEARANCE

- Planted areas to be maintained weed and litter free during maintenance and management period.

TREE PROTECTION

The site manager and all other personnel must be provided with this document to ensure that:

- All requirements of this Tree Protection Scheme are adhered to;
- The site manager and site personnel are updated of any approved changes or variations to this document (approval for alterations must be obtained in writing from the LPA);
- Site personnel must work in accordance with this document at all times, or in accordance with any approved variation; and
- The tree protection measures are left in place until the construction phase of development is completed, except with the written consent of the LPA.

TREE PROTECTION BARRIERS

In order to protect the above and below ground features and characteristics of retained trees from damage during construction, tree protection fencing will be installed as illustrated. The locations of tree protection barriers have been informed by the development edge of the proposals. Tree protection barriers will be fully installed before the arrival of any plant or construction activity on-site. The barriers will serve to prohibit any access into the RPAs and tree protection barriers will remain in place for the duration of construction work until is deemed completed. Tree protection fencing will consist of the default specification recommended within BS5837:2012, comprising a scaffold framework, well braced to resist impacts, with vertical tubes spaced at a maximum of 3m to add further stability. Onto this, weldmesh panels will be securely fixed with wire or scaffold clamps (see extract of BS 5837 - Figure A). Special attention is essential in maintaining the protective barriers during the construction, ensuring that it remains rigid and complete as well as fit for the purpose intended. To avoid disturbances to the protective barriers once installed, they will be inspected frequently. Repairs shall be made immediately where required.

GENERAL SITE PRECAUTIONS

The following points must be observed during both advanced works and the construction process:

- No fires will be lit on-site;
- Cutting down, uprooting, damaging or otherwise destroying any retained tree is prohibited;
- No access will be permitted inside RPAs (unless authorisation is obtained in writing from the LPA);
- No materials, equipment or debris will be stored within the RPA at any time;
- If during construction, there are any excessive levels of dust build-up on retained trees then trees must be hosed down immediately with a clean water supply;
- Notice boards, telephone wires or other services must not be attached to any part of retained trees; and;
- Materials which will contaminate the soil (e.g. concrete, cement, chemical toilets, diesel oil, vehicle washings etc.) must not be permitted within, or close to RPAs of retained trees. Consideration must be given to any sloping ground on-site to ensure that contamination of soil in the RPA would not occur if there were spillage, seepage or displacement elsewhere on-site. To avoid any associated damage or injury occurring to the trees as a direct result of contact with contaminants, works including cement mixing, re-fuelling and tool or machine washing will not be permitted within 20m uphill of any retained tree.

PROCEDURES FOR INCIDENTS

If any breach of the approved tree protection measures occurs:

- The site manager must be informed immediately;
- The Local Planning Authority Tree officer (or other Planning Officer) must be informed, as well as the appointed project Arboriculturist at the earliest opportunity;
- Swift action must be taken to halt the breach and prevent any further breaches; and
- All preventative action and details of agreed remedial works must be recorded and reported to the LPA.

NOTE: This tree protection advice is not substitute for an Arboricultural Method Statement. All tree protection advice is to be signed off by a suitably qualified arboriculturalist.

Figure A: Default specification for protective barrier

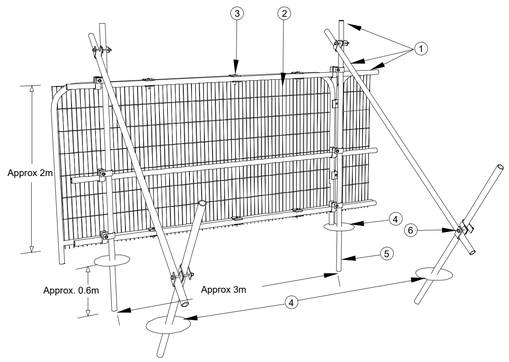

① Standard scaffold poles
② Heavy gauge 2m tall galvanised tube and welded mesh infill panels
③ Panels secured to uprights and cross-members with wire ties
④ Ground level
⑤ Uprights driven into the ground until secure (minimum depth 0.6m)
⑥ Standard scaffold clamps

PLANTING SCHEDULE

Shrubs

Number	Species	Specification	Pot Size	Density
12	Lonicera nitida	Bushy :C	5L	3/m²

Rev	Comment	Date
b	Layout Update	21.09.23
a	Area of concrete extended	11.09.23

LAIRD BAILEY LANDSCAPE ARCHITECTS
t: 0330 043 4883
e: hello@lbla.co.uk
Costwolds | Somerset | South Wales | Kent

Client: bp pulse

Project Title:

M&S Shoreham

Drawing Title:

Hard & Soft Landscape Proposals (Sheet 2 of 2)

Date: 31 August 2023
Drawing Number: 401_LBD01
Scale: 1:50 at A1
Status: Final

Drawn By: AL
Checked by: DB
Revision: B
Use: Planning