Planning Application - part 1

A1. Applicant Details

Organisation	Adur District Council		
	Title	**Forename**	**Surname**
Name	mr	john	perry

A1.1 Address Details

Name or flat number	~~1-60~~
Property number or name	~~Avon Court~~ ADC HOUSING MANAGEMENT SERVICES
Street	~~Avon Close~~ 1HAM ROAD
Locality	~~Sompting~~
Town	~~Lancing~~ STORRINGTON-BY-SEA
County	West Sussex
Postal Town	~~BN15~~ ~~0BR~~
Postcode	~~bn15 0bw~~ BN43 6PR

A1.2 Communication Details

	Nat Code	**Extn No.**
Telephone No.		
Daytime Telephone No.	263029	63029
Fax No.	263102	
Email Address	JOHN.PERRY@ADUR.GOV.UK	
DX Number		

PLANNING

PLAN No. ADC/0486/07

DATE RECEIVED 08 AUG 2007

A2. Agent Details

Organisation	Adur District Council		
	Title	**Forename**	**Surname**
Name	mr	~~John~~ PETER	~~perry~~ LATHAM

A2.1 Address Details

Name or flat number	
Property number or name	civic centre
Street	ham road
Locality	
Town	shoreham by sea
County	west sussex
Postal Town	
Postcode	bn43 6pr

A2.2 Communication Details

	Nat Code	**Extn No.**
Telephone No.	01273263029	
Daytime Telephone No.	01273263029	63029
Fax No.	01273263102	
Email Address	john.perry@adur.gov.uk	
DX Number		

Site boundaries (fences, walls, etc.), driveways, paved areas and other hard surfaced areas

Existing boundaries are hedges and fencing

8. Site Area & Floor Space

Site Area 4000

Units X square metres _ hectares

Width of site frontage 110 metres

Is the application for new building works? _ Yes X No

Please state the existing floorspace of the building 0 sq.m

Please state the proposed new floorspace 0 sq.m

Is the proposal for a change of use? _ Yes X No

Please state the floorspace related to the change of use 0 sq.m

Does the proposal involve the removal or demolition of any part of the existing building? _ Yes X No

Description of removal/demolition

9. Existing Uses

Current use of land or building

Sheltered housing

If vacant what was the land or building last used for?

10. Residential Information

Select the type of land the development is on

_ Brown-field
_ Green-field
_ Part Greenfield, Part Brownfield
X Don't Know

Is the number of residential units changing? _ Yes X No

If Yes, fill out the table below:

	Existing	Proposed	Net Gain
Houses or Bungalows	0	0	0
Flats/Maisonettes/Apartments	0	0	0
Bedsits	0	0	0
0	0	0	0

11. Interest

State the applicant's interest in the land

X Owner
_ Lessee
_ Prospective purchaser
_ Other

If Other give details

Does the applicant own or control any adjoining land? X Yes _ No
Has any part of the site been in council ownership? X Yes _ No

12. Height

State the height of the new development

2.3 **metres**

13. Car Parking

Please fill out the car parking space details in the table below:

	Existing	Proposed	Net Gain
Car Spaces	0	0	0
Goods Vehicle Spaces	0	0	0
Cycle Spaces	0	0	0
Disability Spaces	0	0	0

14. Drainage

State method of disposal for surface water

New soakaways

State method of disposal for foul sewage

Not applicable

If septic tanks are used, have the ground conditions been investigated? If "Yes" submit the details with the application _ Yes X No

15. Previous Applications

Any previous known applications for this proposal? _ Yes X No

Reference Number

Date of Application (yyyy-mm-dd)

16. Details

Has the proposal for works or development already been carried out? _ Yes X No

Is the application for any of the following purposes listed below?

Industry	_ Yes X No
Office	_ Yes X No
Warehousing	_ Yes X No
Storage	_ Yes X No
Shopping	_ Yes X No
Any commercial use involving staff/parking/operating hours	_ Yes X No

Signature **Electronically submitted; no signature required.**

Certificate A

I certify that:

on the day 21 days before the date of the accompanying application nobody, except the applicant, was the owner of any part of the building/land to which the application relates.

Signatory

	Title	Forename	Surname
Signatory	mr	peter	latham
Signature	**Electronically submitted; no signature required.**		
Date (yyyy-mm-dd)	2007-08-03		

Under the provisions of the Planning Acts, if any person issues a certificate which purports to comply with the requirements of this Act and contains a statement which he knows to be false or misleading in a material particular, he shall be guilty of an offence. Please ensure that the information you have provided is accurate.

Agricultural Holdings Certificate

X None of the land to which the application relates is, or is part of, an agricultural holding. _ I have/the applicant has given the requisite notice to every person other than my/him/herself who, on the day 21 days before the date of this application was a tenant of an agricultural holding on all or part of the land to which the application relates as follows:

Signatory

	Title	Forename	Surname
Signatory	mr	peter	planning
Signature	**Electronically submitted; no signature required.**		
Date (yyyy-mm-dd)	2007-08-03		

Under the provisions of the Planning Acts, if any person issues a certificate which purports to comply with the requirements of this Act and contains a statement which he knows to be false or misleading in a material particular, he shall be guilty of an offence. Please ensure that the information you have provided is accurate.



This map is reproduced from Ordnance Survey material with the permission of Ordnance Survey on behalf of the Controller of Her Majestys Stationery Office. Crown Copyright. Unauthorised reproduction infringes Crown copyright and may lead to prosecution or civil proceedings. Adur District Council. Licence Number 100018844. 28/11/2006

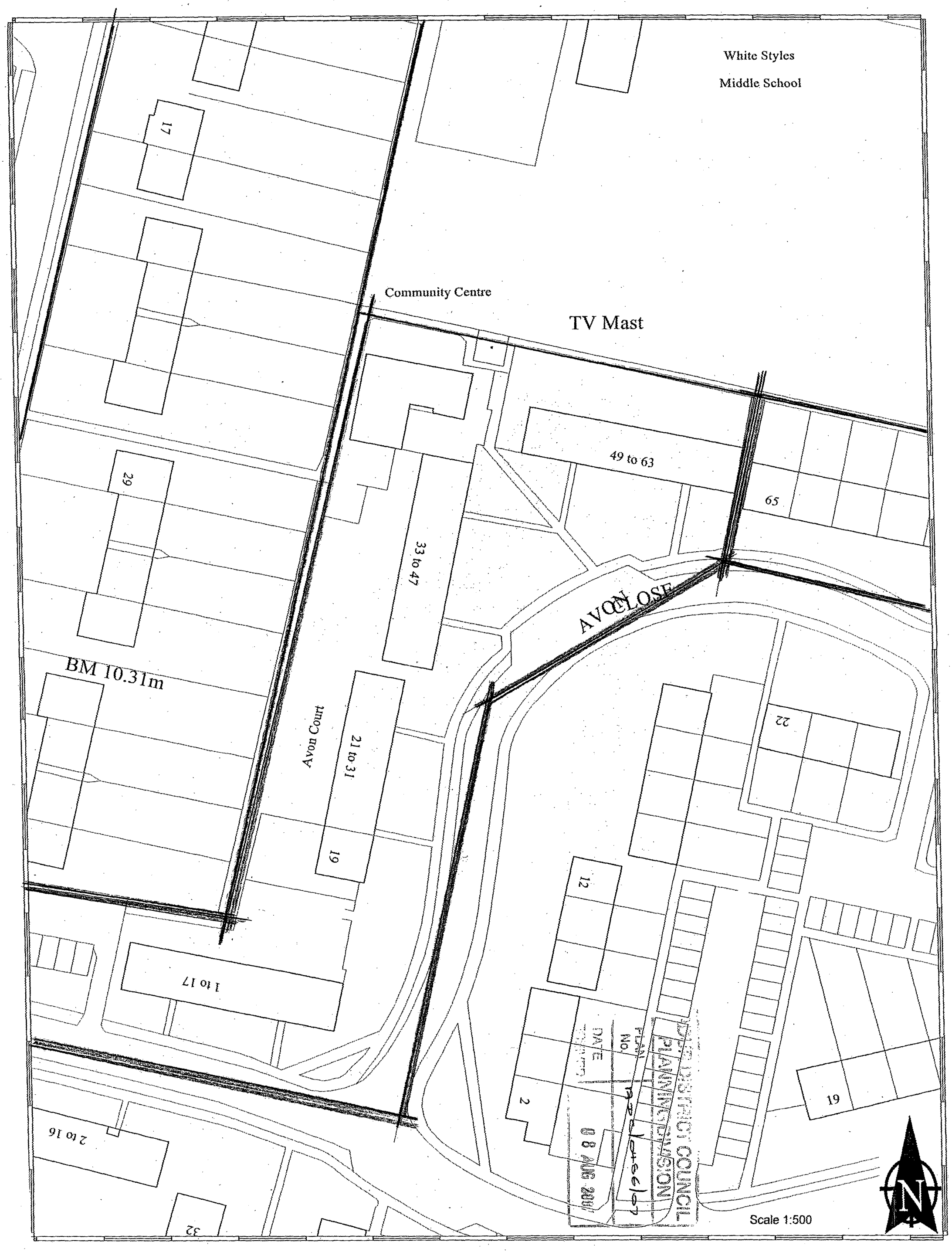

ADC DISTRICT COUNCIL
PLANNING DIVISION
PLAN No. 1626/07
DATE 08 AUG 2007

This map is reproduced from Ordnance Survey material with the permission of Ordnance Survey on behalf of the Controller of Her Majestys Stationery Office. Crown Copyright. Unauthorised reproduction infringes Crown copyright and may lead to prosecution or civil proceedings.
Adur District Council. Licence Number 100018844. 23/07/2007

DE-LUXE BRICK (MARLBOROUGH) TECH DATA 4 a 18-1-'92

Marlborough Garage 12½° Pitch 9'0½", 10'0½" & 11'0½" Spans.

Std plan ref : MAR09-11/16-24.

SPAN Model No.			LENGTH Ext. A.		Int B.	
9'0"	10'0"	11'0".	Imp.	Met.	Imp.	Met.
1	6	11	16'5"	5004	15'9"	4801
2	7	12	18'5"	5613	17'9"	5410
3	8	13	20'5"	6223	19'9"	6020
4	9	14	22'11"	6985	22'3"	6782
5	10	15	24'5"	7442	23'9"	7239

SPAN	Ext. width C		int. width D		Clearance E		Opening F		Apex G	
	Imp.	Met.	Imp.	Met.	Imp.	Met.	Imp.	Met.	Imp.	Met.
9ft	9'0½"	2756	8'6"	2591	6'10"	2083	7'2"	2184	7'6⅝"	2302
10ft	10'0½"	3061	9'6"	2895	7'10"	2388	8'2"	2489	7'8"	2336
11ft	11'0½"	3366	10'6"	3200	8'10	2692	9'2"	2794	7'9¼"	2369

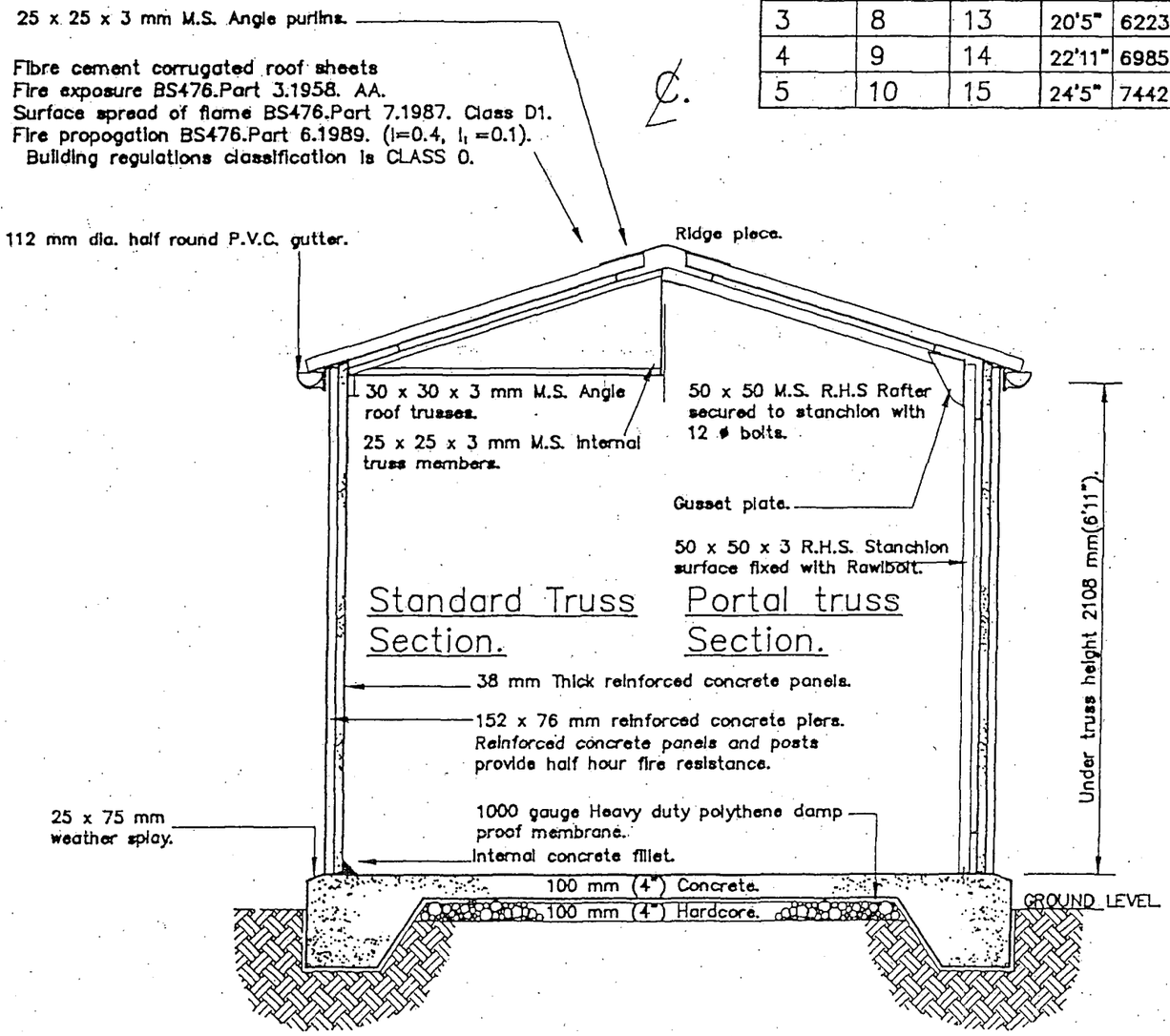

NOTE :- Depth and breadth of perimeter concrete to suit site conditions and/or Local Authority approval.

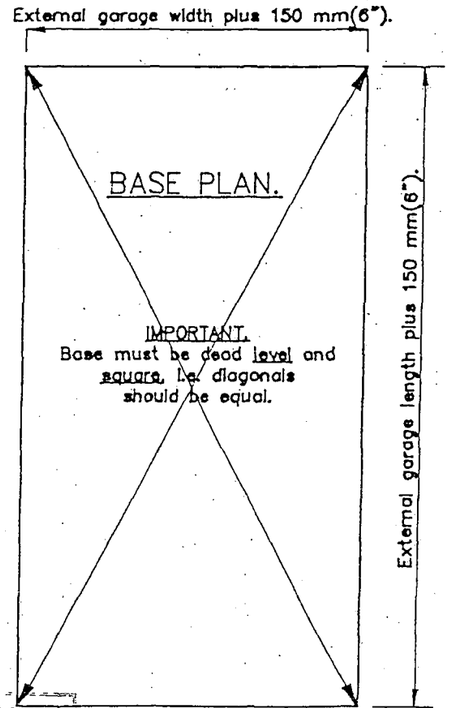

COUNCIL
PLANNING PERMISSION
PLAN No. 86/07
DATE 08 AUG 2007

LIBRARY No.
MAR10.

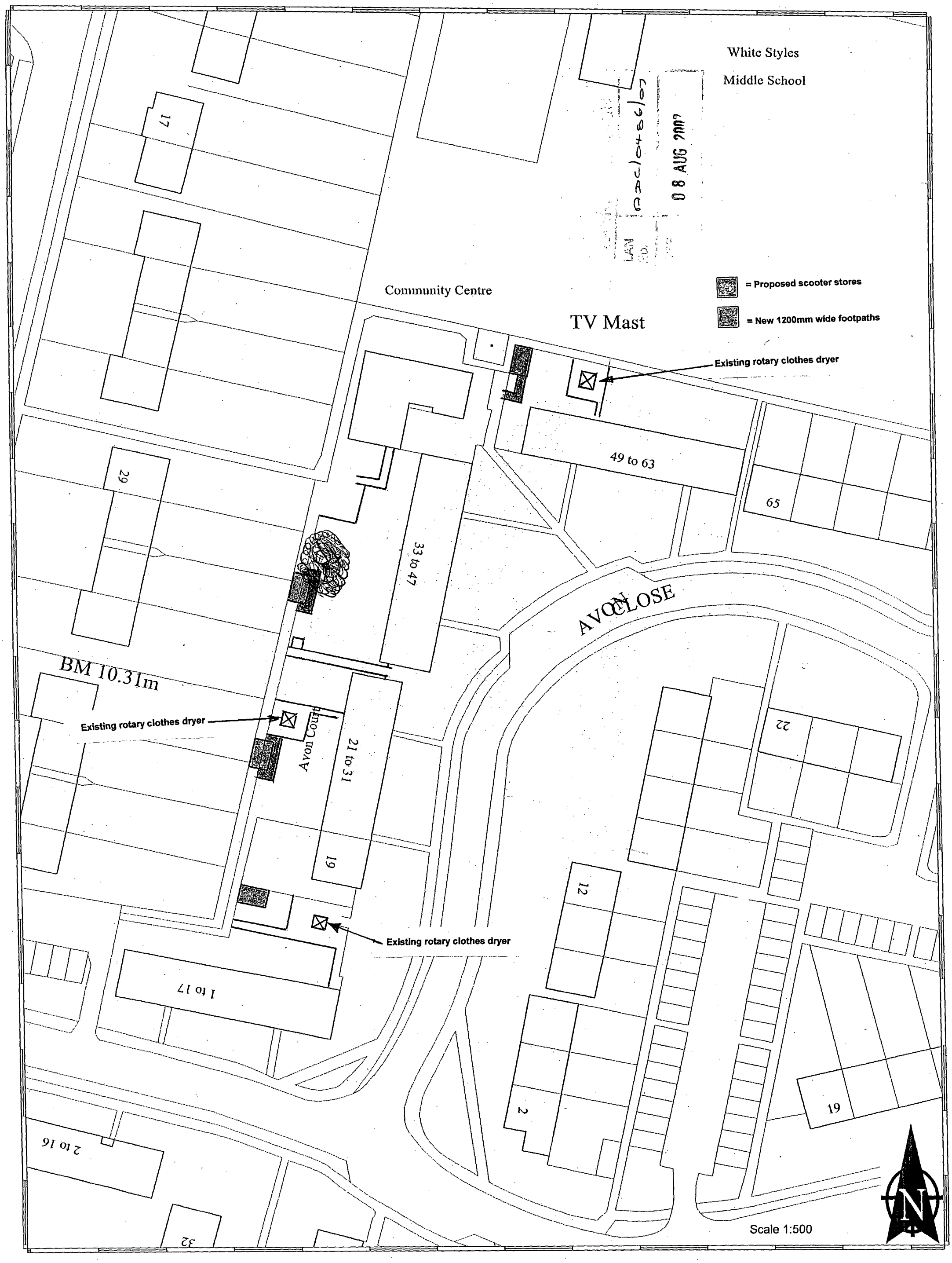

This map is reproduced from Ordnance Survey material with the permission of Ordnance Survey on behalf of the Controller of Her Majestys Stationery Office. Crown Copyright. Unauthorised reproduction infringes Crown copyright and may lead to prosecution or civil proceedings.
Adur District Council. Licence Number 100018844. 23/07/2007

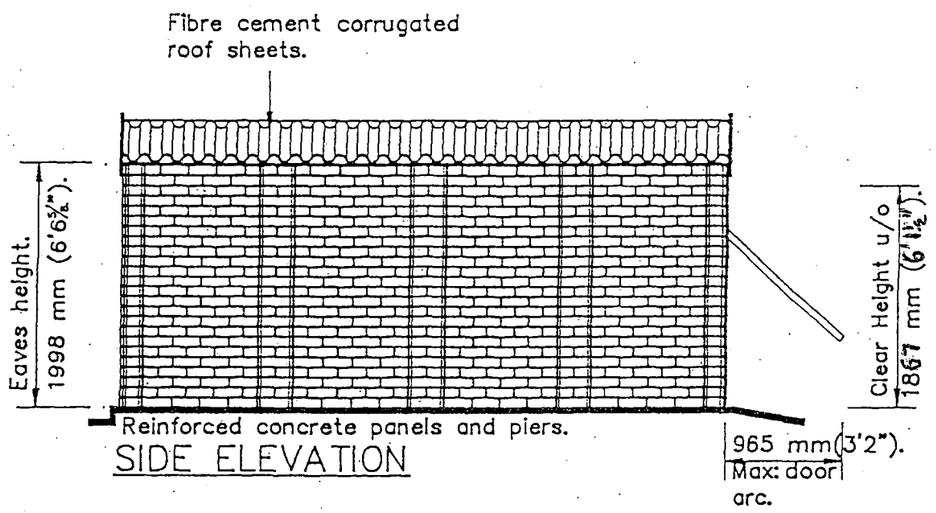

SIDE ELEVATION

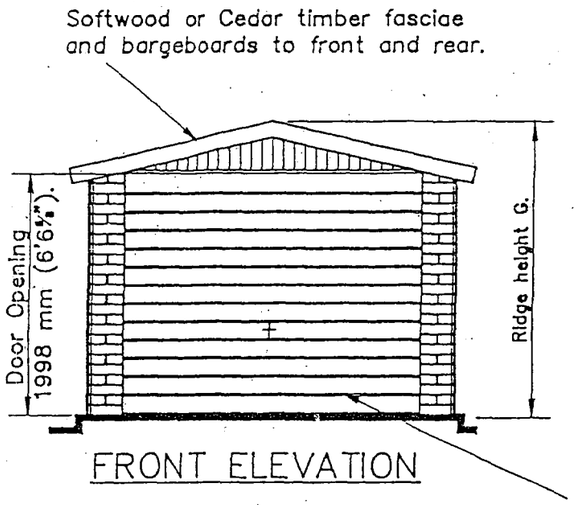

FRONT ELEVATION

Galvanised u/o door shown

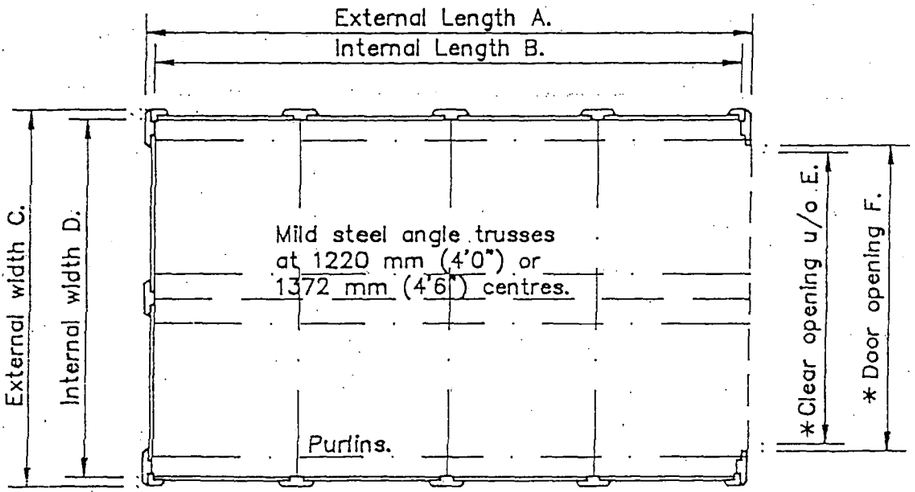

PLAN

All steelwork red oxide primed at point of manufacture.

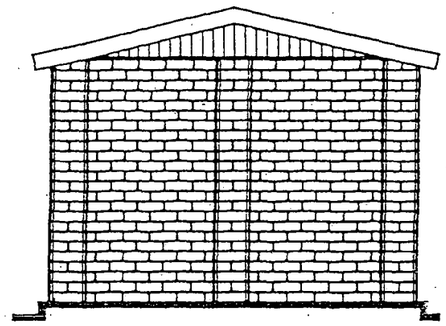

REAR ELEVATION

Panel finish: Red 'Brick'

*Georgian door opening 51 mm(2") less than stated above.

Position of window(s) and additional door(s) to be indicated on this plan by applicant before submission to Local Authority, together with the house and site details.(Not by Parklines).

DOOR OPTIONS	tick.
Type B Cedarwood traditional doors. Cedarwood fascia.	
Type D Cedarwood up and over door, spring operated and fully retractable. Cedarwood fascia.	
Type G Georgian style Metal up and over door, spring operated & fully retractable. Cedarwood fascia.	
Type M Metal up and over door, spring operated and fully retractable Softwood fascia.	

DE-LUXE BRICK (MARLBOROUGH) TECH DATA 3 a 18-1-'92

PARKLINES
Tel : 0121 446 6030
Fax : 0121 446 5991
Gala House, 3 Raglan Road
Birmingham B5 7RA

OPTIONAL EXTRAS.

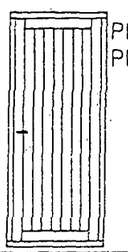

PD 2
PD 3

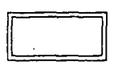

TYPE F WINDOW.

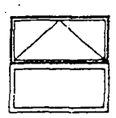

TYPE G WINDOW.



TYPE A WINDOW.

Proposed Marlborough 9ft,10ft & 11ft Span Garage
For.....
.....
.....

NOTE: Please read reverse of this document for further construction and base requirements.

©This drawing is copyright and must not be reproduced or communicated to a third party without written permission.

ISSUE	1			
DATE	JAN '92			

LIBRARY No.

MAR 09-11/16-24.



This map is reproduced from Ordnance Survey material with the permission of Ordnance Survey on behalf of the Controller of Her Majestys Stationery Office. Crown Copyright. Unauthorised reproduction infringes Crown copyright and may lead to prosecution or civil proceedings. Adur District Council. Licence Number 100018844. 28/11/2006

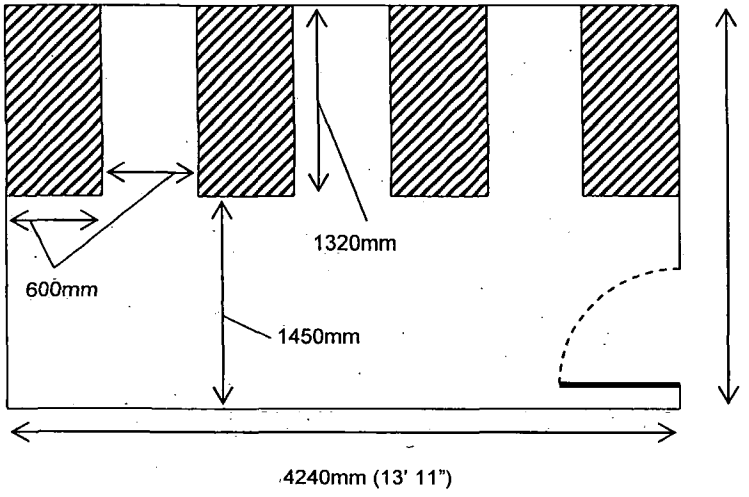

NOT TO SCALE

This sketch is only intended as a guide and must not be relied on for accurate measurements or layout

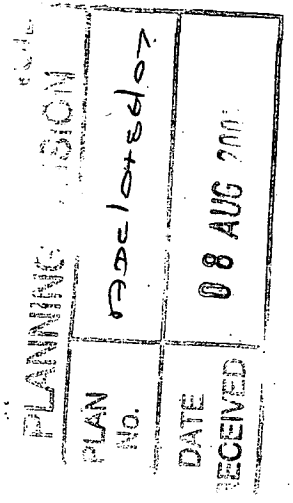

= scooter spaces with charging points

PROPOSED SCOOTER STORES at AVON COURT – 'Parklines Marlborough No 5'

DRAWING NO: SC-AVON-1

ADUR
DISTRICT COUNCIL