ADUR & WORTHING
PLANNING SERVICES
PLAN AWDM/ 1779/17
DATE VALID - 5 DEC 2017

PATIO DOOR

AMENDMENT

EXTERNAL SLIDER

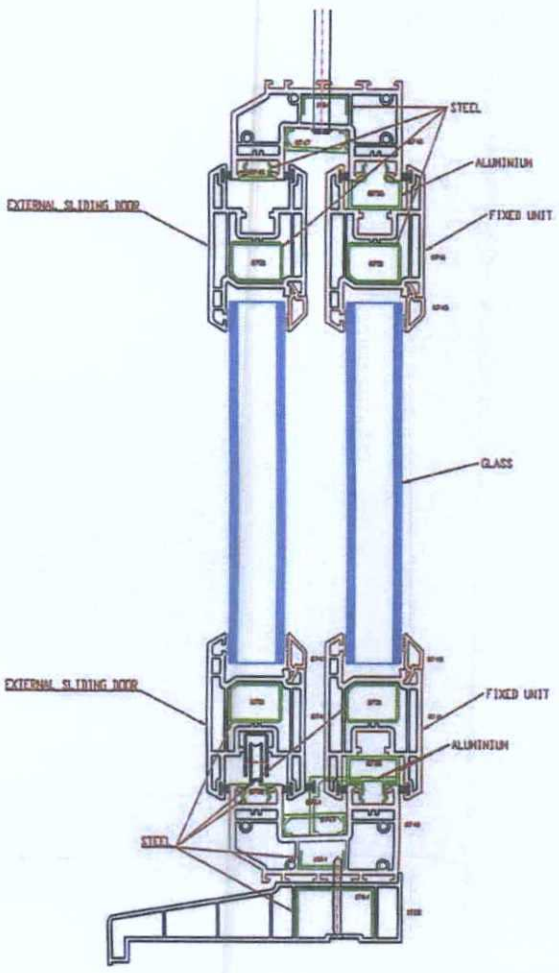

~~EXTERNAL SLIDER USING 8742 MIDRAIL~~

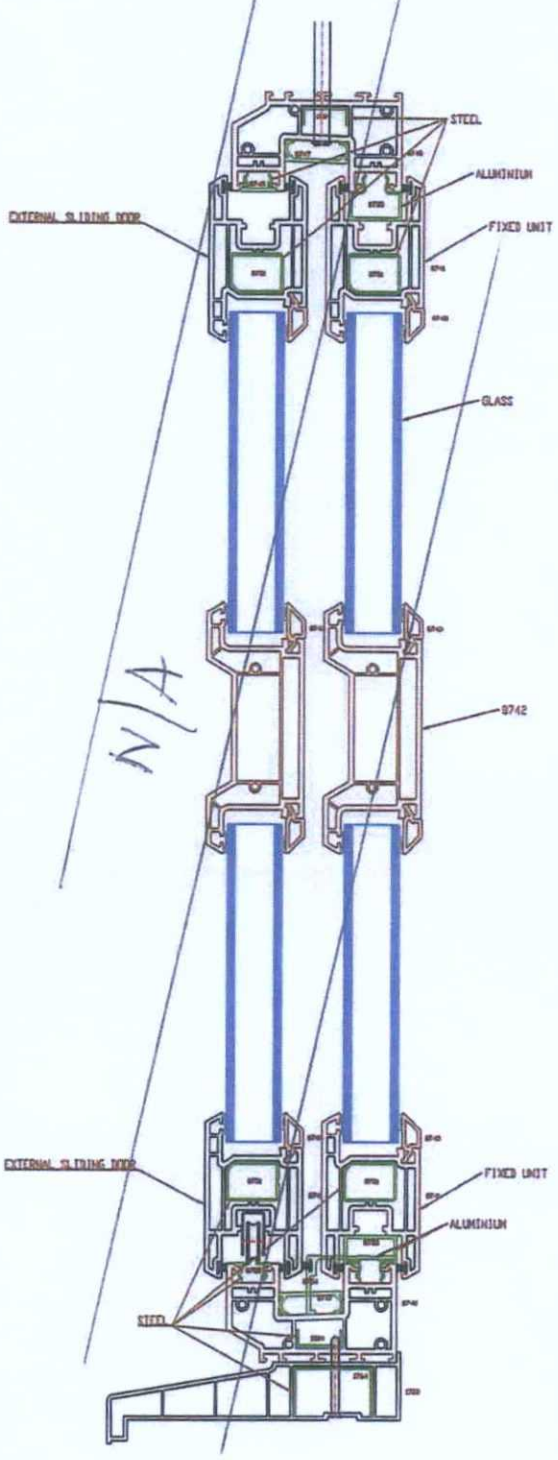

~~INTERNAL SLIDER~~

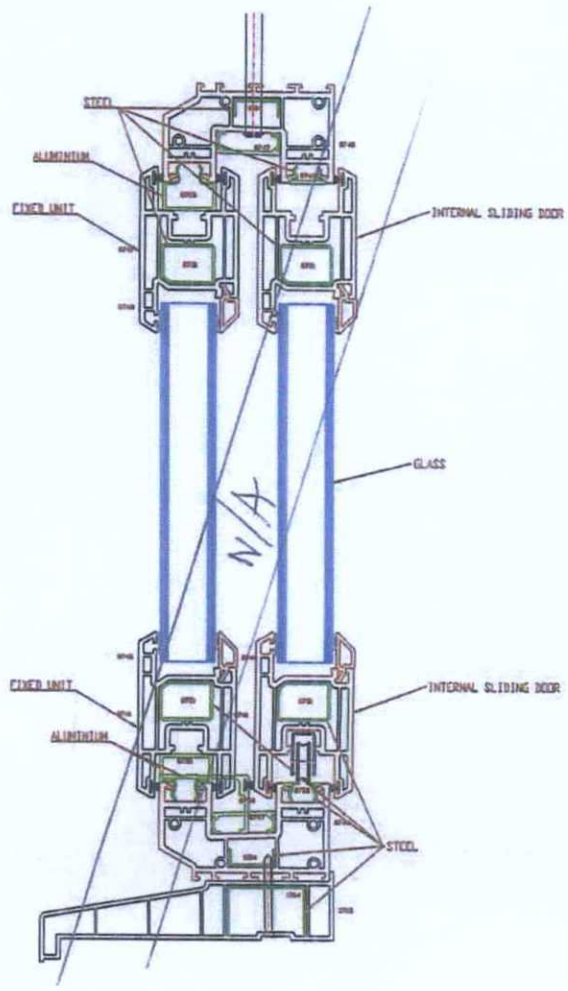

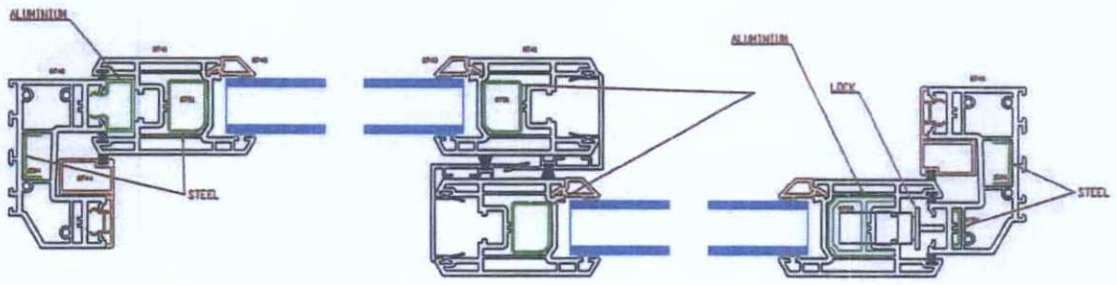

HORIZONTAL VIEW