ADUR & WORTHING
PLANNING SERVICES
PLAN AWDM/ 1779/17
DATE VALID - 5 DEC 2017

CASEMENT WINDOW

AMENDMENT

CHAMFERED

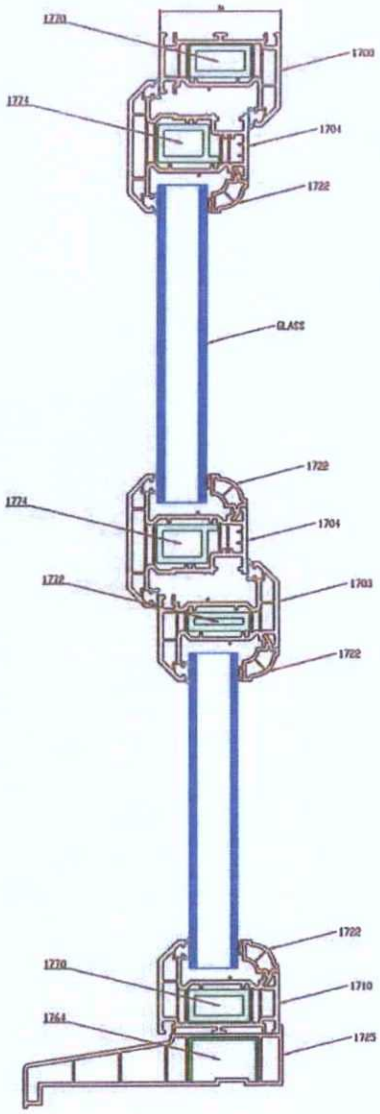

SCULPTURED

