MDJ ARBORICULTURAL CONSULTANCY LIMITED

Arboricultural ASSOCIATION
Professional Member

RETROSPECTIVE ARBORICULTURAL IMPACT ASSESSMENT AND METHOD STATEMENT

For the approved construction of a new dwelling at 51 Mendip Road, Worthing, BN13 2LR

Prepared For:	Narnia Homes Limited
Local Authority:	Worthing Borough Council (WBC)
Document reference:	MDJAC-24.032-RAIAPMS-01
Date:	12 May 2024
Revision:	First Issue
Author:	Matthew Jones BSc (Hons), MArborA

15 Windsor Close
Southwater
West Sussex
RH13 9XH

www.mdjac.co.uk | info@mdjac.co.uk

Company Registration No.
(England & Wales): 13900533

EXECUTIVE SUMMARY 2
1 Introduction 3
1.1 Instruction 3
1.2 Terms of Reference (ToR) 3
1.3 Author 4
2 Statutory controls 4
2.1 Tree Preservation Orders (TPOs) 4
2.2 Conservation Areas (CAs) 5
3 Impact assessment methodology 5
4 Site assessment 5
4.1 Site visit and tree inspection 5
4.2 Existing tree stock 6
4.3 Description of site 6
5 Arboricultural Impact Assessment (AIA) 6
5.1 Summary 6
5.2 Assessment 7
5.3 Remediation 8
6 Conclusions and recommendations 11
6.1 Conclusions 11
6.2 Recommendations 12
7 REFERENCES 13

© MDJ Arboricultural Consultancy Limited, 2024.

This document has been prepared for the sole use of Narnia Homes Limited in accordance with the terms of my instruction. Views expressed or implied may not be relied upon by any third-party without the written consent of MDJ Arboricultural Consultancy Limited (MDJAC). The report remains the property of MDJAC and may not be redistributed in whole or in part, lent, hired or copied, without the written consent of MDJAC.

DRAFT

EXECUTIVE SUMMARY

S1. This Retrospective Arboricultural Impact Assessment and Preliminary Method Statement (RAIAPMS) has been instructed by Narnia Homes Limited for the consented development for construction of a new residential dwelling at 51 Mendip Road, Worthing, BN13 2LR.

S2. This report is intended to be submitted to Worthing Borough Council (WBC) as part of the supporting technical information to permit discharge of Condition 9 of WBC planning reference AWDM/0025/23 and it has been prepared in accordance with British Standard BS5837:2012 'Trees in relation to design, demolition and construction – Recommendations'.

S3. I have consulted the local authority's online list of confirmed TPOs (Worthing Borough Council, 2024), and this suggests that no TPO is in force on the site at the time of writing. However, the planning condition in question specifically makes reference to a TPO'd holm oak which conflicts with the authorities online directory. Accordingly, it has been assumed that the tree is indeed protected for the purposes of this report. The site is not within a conservation area.

S4. Having viewed the site and the proximity of the now completed foundations from the holm oak tree, and having considered this against the size of the root protection area recommended by BS5837:2012 and the anecdotal suggestion that no significant roots were found, I am confident that any roots encountered were likely to be of small size and likely below the 25mm diameter threshold that is commonly accepted and used to determine roots of significance. The likelihood of detrimental impacts arising from these works is therefore low.

S5. General disturbance and material storage was evident within the wider RPA to the south of the property, and I have recommended remedial works to remove stored materials, to dilute potential chemical runoff into the soil, and to improve soil conditions (Section 5). Further, I have provided my recommended protection measures for the duration of the works, which seek to minimise any further disruption within the RPA.

S6. Despite the works commencing prior to the completion of an arboricultural impact assessment, based on the above considerations, I conclude that the overall arboricultural magnitude of the scheme is low, as defined at Table 1, and that the likelihood of permanent adverse impacts arising following the proposed remediation measures is low.

DRAFT

1 INTRODUCTION

1.1 INSTRUCTION

1.1.1 This Retrospective Arboricultural Impact Assessment and Preliminary Method Statement (RAIAPMS) has been instructed by Narnia Homes Limited for the consented development for construction of a new residential dwelling at 51 Mendip Road, Worthing, BN13 2LR.

1.2 TERMS OF REFERENCE (TOR)

1.2.1 This report is intended to be submitted to Worthing Borough Council (WBC) as part of the supporting technical information to permit discharge of Condition 9 of WBC planning reference AWDM/0025/23 and it has been prepared in accordance with British Standard BS5837:2012 *'Trees in relation to design, demolition and construction – Recommendations'*.

1.2.2 Condition 9 states:

> ***'Before any development commences on site, the following shall be submitted to and approved in writing by the Local Planning Authority:-***
>
> ***An arboricultural implications assessment, arboricultural method statement and tree protection plan to safeguard the TPO'd Holm Oak on site including: protection measures during and after construction and any construction exclusion zones in accordance with BS5837:2005 which shall include any proposal for pruning or other preventative works.***
>
> ***Any mitigation or protection measures approved by the Local Planning Authority shall be put in place prior to commencement of any construction works and retained throughout the period of construction work on the site or for such longer period as approved in writing by the Local Planning Authority.'***

1.2.3 The above constitutes a pre-commencement condition and thus, should have been discharged prior to the commencement of works on site. However, construction had already commenced prior to my instruction and as such, this report is of retrospective nature. It outlines the impact of works carried out to date and will provide remediation works where necessary, and provides recommendations for tree protection for the remainder of the project.

1.2.4 **The contents of this report are based on the arboricultural and design information available at the time of writing. Detailed design elements such as foundation designs, underground service routes, hard and soft landscaping and other such information is included where known. If it is not available at present, subsequent submissions with revised arboricultural assessments can be requested through the use of appropriate planning conditions.**

1.2.5 The agreed scope of work is outlined below:

1. To undertake a site visit and tree inspection of the trees within influencing distance of the proposals, in accordance with BS5837:2012; and

DRAFT

2. To produce this arboricultural report; identifying the impact of the proposals and what working methodologies or protection measures should be adhered to, to ensure successful integration of the proposals into the existing landscape.

1.2.6 This report should be read in conjunction with the documents and plans listed below for context:

- The tree survey schedule (ref. MDJAC-24.032-TSS-01); and
- The tree protection plan (ref. MDJAC-24.032-TPP-01).

1.3 Author

1.3.1 I am Matthew Jones BSc (Hons), MArborA, the Director and Principal Arboriculturist of MDJ Arboricultural Consultancy Limited.

1.3.2 I hold a Bachelor of Science Degree with Honours in Arboriculture and Urban Forestry, awarded by The University of Central Lancashire (UCLan) in 2022. This is a top up degree following successful completion of a Foundation Degree in Arboriculture, also awarded by UCLan in 2020. I have also completed the National Diploma (RQF Level 3) in Arboriculture and Forestry at Merrist Wood College, Guildford in 2009.

1.3.3 During the course of my career I have attended various CPD events and courses. I hold the Professional Tree Inspection accreditation awarded by LANTRA and have previously been a registered user of The International Society of Arboriculture (ISA) Tree Risk Assessment Qualification (TRAQ) methodology.

1.3.4 I am a Professional Member of the Arboricultural Association (The AA) and an Associate Member of The Institute of Chartered Foresters (The ICF). I am therefore bound by the code of ethics and required to uphold the professional standards expected of both professional bodies.

1.3.5 I am regularly instructed to carry out appraisals of various sizes of tree stocks in relation to development, health and safety considerations, and the potential impact of trees on the built environment; and I am required to provide considered tree management recommendations as necessary during the course of these instructions.

2 Statutory Controls

2.1 Tree Preservation Orders (TPOs)

2.1.1 I have consulted the local authority's online list of confirmed TPOs (Worthing Borough Council, 2024), and this suggests that no TPO is in force on the site at the time of writing.

2.1.2 However, the planning condition in question specifically makes reference to a TPO'd holm oak which conflicts with the authorities online directory. Accordingly, it has been assumed that the tree is indeed protected for the purposes of this report.

DRAFT

2.2 Conservation Areas (CAs)

2.2.1 The site is not within a designated conservation area and as such, there are no arboricultural constraints in this regard.

3 Impact Assessment Methodology

3.1.1 In order to systematically assess the overall impact of the scheme, I have devised a series of categories which seek to provide a summary of the likely, post-planning site conditions on the presumption that planning consent is gained, and the proposed scheme as detailed within this report is built out.

3.1.2 My conclusions relating to the overall arboricultural impact of the scheme are summarised at **Table 1** below.

Table 1: MDJAC magnitudes of impact summary.

Impact category	Description
High	Total or extensive alteration to the existing arboricultural character of the site, or the principal arboricultural features on or adjacent to it. The post-planning situation is significantly and adversely different.
Medium	Partial alteration to the existing arboricultural character of the site, or the principal arboricultural features on or adjacent to it. The post-planning situation is partially different.
Low	Minor alteration to the existing arboricultural character of the site, or the principal arboricultural features on or adjacent to it. The post-planning changes will be distinguishable, but comparable to the existing context.
Negligible	No or very minor alteration to the existing arboricultural character of the site, or the principal arboricultural features on or adjacent to it. The post-planning situation is not readily distinguishable from the existing context with no material adverse impact.

4 Site Assessment

4.1 Site Visit and Tree Inspection

4.1.1 I undertook a site inspection and tree survey on Tuesday 7 May 2024. Weather conditions at the time were clear, dry and bright and deciduous trees were in full leaf.

4.1.2 The dimensions and assessments of the trees contained within this document reflect their condition at the time of the survey. I surveyed the trees from within the boundaries of the site only. The presence of additional physiological or structural defects that may only be visible from viewpoints with restricted access cannot be discounted. All trees were surveyed from ground level only, aided by the use of binoculars where considered necessary. Other aids included an acoustic hammer and a steel probe, both of which were used where necessary to assess and evaluate the extent of any dysfunctional wood, cavities or other structural defects where necessary. The information contained within this document does not constitute a full hazard or risk assessment, and therefore MDJ Arboricultural Consultancy Limited makes no guarantee of their stability of safety.

DRAFT

4.1.3 I collected the baseline data using a handheld tablet, which was then exported to Microsoft Excel to produce the tree survey schedule at **Appendix 1**. The locations of the trees have been plotted using measurements taken on site. This information was exported to produce a Tree Constraints Plan (TCP), onto which the proposed layout has been overlaid to produce the Tree Protection Plan (TPP) at **Appendix 2**.

4.2 Existing Tree Stock

4.2.1 The tree stock is limited to a single holm oak (T1), located to the rear of 51 Mendip Road and close to the western boundary which is shared with 53 Mendip Road. This specimen has been assigned category 'B' status, as detailed in the accompanying tree survey schedule.

4.3 Description of Site

4.3.1 The site is formed by the curtilage of 51 Mendip Road, an end of terrace residential property located between Mendip Road and Mendip Crescent. The new property is approved, subject to planning conditions, for construction within the land to the east of the existing dwelling.

5 Arboricultural Impact Assessment (AIA)

5.1 Summary

5.1.1 When I visited the site, construction had already commenced with all major groundworks including foundation excavation and construction, scaffold erection and initial brickwork construction, all having been completed, as shown below.

Photograph 1: (below left), looking southwards showing the view of the site from Mendip Road; and

Photograph 2: (below right), looking northwards, showing the subject tree in views from Mendip Crescent.





DRAFT

Photograph 3: (below left), showing construction of the eastern flank wall, adjacent to Mendip Crescent; and

Photograph 4: (below right), looking northwards from the dropline of T1, showing construction of the southern flank wall.




Photograph 5: (below left), showing material storage within the RPA of T1; and

Photograph 6: (below right), showing a cement mixer within the RPA of T1.




5.2 Assessment

5.2.1 I understand from discussions with the client that no significant roots were encountered during the construction of the foundations. The use of the word 'significant' can be ambiguous and open to interpretation between professional disciplines and the general public, so for the avoidance of doubt, roots of significance are those of 25mm diameter or greater in the context of this report.

5.2.2 My professional and independent opinion on the likelihood of roots being absent from the foundations excavations, is that it could realistically be true, based on the size of the trees RPA [r=7.1m]. The excavations have taken place at approximately 9m from the base of the tree and therefore, outside of the default, notionally circular, root protection area recommended by BS5837:2012.

5.2.3 The remainder of the root protection area can be separated into two distinct areas: that to the east and west of a timber fence that extends from north to south, at a distance of 3.2m from the tree's trunk, as shown on the tree protection plan.

5.2.4 To the west of the fence, lightweight materials such as insulation sheets and a cement mixer were found to have been stored. These are unlikely to have caused significant soil compaction and therefore, their relocation is the only remedial work required.

5.2.5 By contrast, the soil to the east of the timber fencing has been subject to more extensive disruption, including the removal of what vegetation may have been present, and the subsequent storage of more robust materials, which is likely to have caused some compaction. A concrete mixer was also being used at the time of my visit, which carries the potential for soil damage due to the toxic nature of cement dust to tree roots.

5.3 REMEDIATION

5.3.1 Based on my assessment, I recommend that a small amount of remediation work is required within the RPA of the holm oak, to the east of the timber fencing. Within this area, the following should be undertaken:

1. Remove all building materials and machinery;
2. Flush the soil with large volumes of water to dilute the impacts caused by cement dust and other potential toxic substances. This should be undertaken continuously for at least 48 hours; and
3. Upon completion of the above remediation, suitable protection measures should be installed for the remainder of the project. These measures are simplistic yet robust in nature, and include the erection of a small section of temporary fencing to create a construction exclusion zone (CEZ) to the west of the timber fence, and the placement of temporary ground protection measures to the east of the fence. These are outlined below.

Tree Protection Fencing (TPF)

5.3.2 The rooting environment of the holm oak will be safeguarded by the erection of temporary tree protection fencing to the alternative specification provided in BS5837:2012 (The British Standards Institution, 2012) and set out below. These locations are denoted by **bold red lines** on the appended TPP.

DRAFT

Figure 1: alternative fencing specification for protective barrier (The British Standards Institution, 2012).

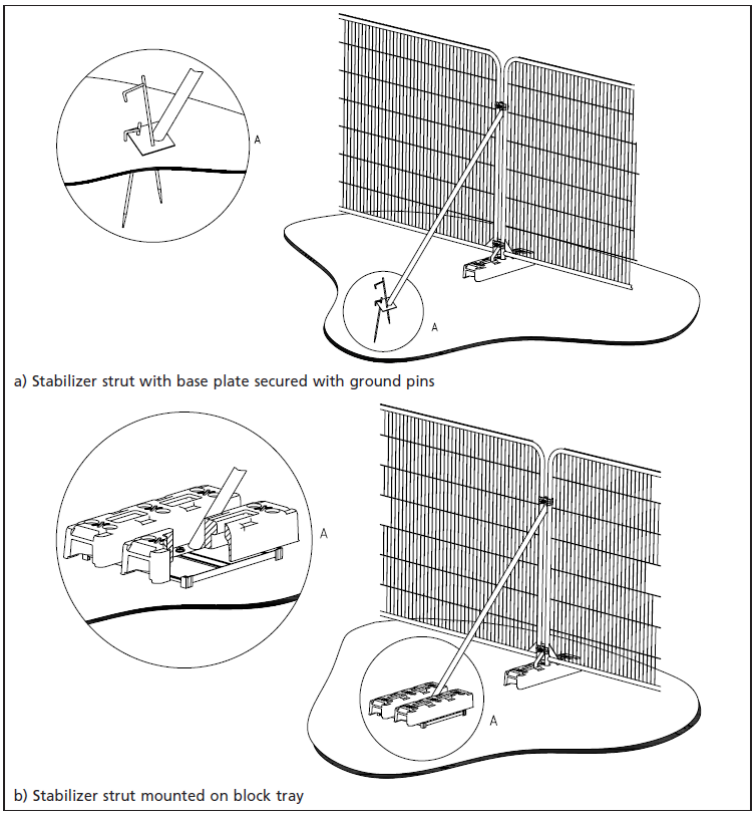

5.3.3 The alternative specification comprises 2m tall, welded mesh panels such as 'heras' panels, set within rubber feet to avoid the need for excavation within the RPAs of retained trees. Individual panels will be joined together using a minimum of two anti-tamper couplers that can only be removed from within the construction exclusion zone. Stabilising struts secured to a base plate with road pins, or to a block tray where fencing is to be erected onto existing hard surfaces, will be incorporated between every other panel.

5.3.4 Existing vegetation will be removed by hand to enable the location of the TPF to be accurately set out by an appropriately qualified engineer.

5.3.5 The TPF will remain in place to serve as physical protection for retained trees for the duration of the demolition and construction activities and will only be removed immediately prior to the landscaping phase once all large plant and machinery have been removed from site.

5.3.6 Temporary signage will be secured to the fencing at appropriate intervals to inform site operatives of the purpose of the fencing. Signage will read **'TREE PROTECTION FENCING – KEEP OUT'** or similar, as shown below.

Figure 2: example protective fencing signage.



Construction Exclusion Zones (CEZs)

5.3.7 Construction exclusion zones will be formed by the erection of the tree protection fencing to the specification set out above. Within the CEZs, the following principles will be observed for the duration of the project:

- No plant or machinery will access the CEZ;
- No mechanical excavation will take place;
- Unplanned excavations will be limited to hand-digging and will be considered by the project arboriculturist before commencement;
- Existing soil levels will not be altered in any way, unless for the removal of existing turf layers, which will be undertaken using hand tools only;
- No machinery or materials of any kind will be stored;
- No liquids or chemicals including fuels, oils, builders' sand or concrete mix will be stored; and
- No fires will be permitted.

Temporary Ground Protection (TGP)

5.3.8 The area of the RPA to the east of the timber fencing will be safeguarded by the placement of suitable temporary ground protection, as shown by **cyan hatching on the TPP**. For areas of existing soft landscaping, this protection should take the form of a series of interlocking boards secured in place on top of a 75mm deep compressible layer of woodchip or similar.

DRAFT

5.3.9 It is anticipated that the small areas of ground protection need only protect the rooting environments from pedestrian and operative footfall, and potentially that of small plant with a maximum weight of 2.5 tonnes. Such ground protection is readily available from various suppliers to suit the required load bearing capacity required and should be placed upon a geotextile membrane and compressible layer of woodchip or similar. In this instance, a basic example is included below.

Figure 3: examples of temporary ground protection boards to protect against footfall and light plant (Ground Guards, 2022).



5.3.10 Ground protection is to be laid following soil remediation set out above, and erection of the TPF, and will remain in place for the remainder of the project.

5.3.11 Once removed, but prior to the landscaping phase, the soil previously covered by the temporary ground protection will be aerated to improve soil conditions. This can be achieved by using hand tools (forks and spades etc.) to break up and turnover the upper 150mm of soil.

6 CONCLUSIONS AND RECOMMENDATIONS

6.1 CONCLUSIONS

6.1.1 Having viewed the site and the proximity of the now completed foundations from the holm oak tree, and having considered this against the size of the root protection area recommended by BS5837:2012 and the anecdotal suggestion that no significant roots were found, I am confident that any roots encountered were likely to be of small size and likely below the 25mm diameter threshold that is

commonly accepted and used to determine roots of significance. The likelihood of detrimental impacts arising from these works is therefore low.

6.1.2 General disturbance and material storage was evident within the wider RPA to the south of the property, and I have recommended remedial works to remove stored materials, to dilute potential chemical runoff into the soil, and to improve soil conditions (Section 5). Further, I have provided my recommended protection measures for the duration of the works, which seek to minimise any further disruption within the RPA.

6.1.3 Despite the works commencing prior to the completion of an arboricultural impact assessment, based on the above considerations, I conclude that the overall arboricultural magnitude of the scheme is low, as defined at **Table 1**, and that the likelihood of permanent adverse impacts arising following the proposed remediation measures is low.

6.2 RECOMMENDATIONS

1. Ensure that the protective measures set out within this report and shown on the appended tree protection plan are erected prior to the commencement of works and followed stringently throughout the remainder of construction.

[redacted]

Matthew Jones, BSc (Hons), MArborA
Director & Arboriculturist

12 May 2024

DRAFT

7 REFERENCES

Ground Guards, 2022. *Tougher Tree Protection.* [Online]
Available at: https://www.ground-guards.co.uk/
[Accessed 28 September 2022].

Matheny, N. & Clark, J. R., 1998. *Trees and Development: a technical guide to preservation of trees during land development.* Champaign, Illinois, USA: International Society of Arboriculture.

The British Standards Institution, 2012. *British Standard BS5837:2012 'Trees in relation to design, demolition and construction - Recommendations',* s.l.: BSI Standards Limited.

Worthing Borough Council, 2024. *Planning TPO Register - Worthing.* [Online]
Available at: https://www.adur-worthing.gov.uk/applications/tpo-register/worthing
[Accessed 10 May 2024].

DRAFT

MDJ ARBORICULTURAL CONSULTANCY LIMITED

Arboricultural ASSOCIATION
Professional Member

APPENDIX 1:
TREE SURVEY SCHEDULE

15 Windsor Close
Southwater
West Sussex
RH13 9XH

www.mdjac.co.uk | info@mdjac.co.uk

Company Registration No.
(England & Wales): 13900533

MDJ ARBORICULTURAL CONSULTANCY LIMITED

Arboricultural ASSOCIATION
Professional Member

TREE SURVEY SCHEDULE

Site Address: 51 Mendip Road, Worthing, BN13 2LR

Prepared For: Narnia Homes Limited

Reference: MDJAC-24.032-TSS-01

Survey date: 07/05/2024

15 Windsor Close
Southwater
West Sussex
RH13 9XH

www.mdjac.co.uk | info@mdjac.co.uk

Company Registration No.
(England & Wales): 13900533

Client name: Narnia Homes Ltd
Site: 51 Mendip Road, Worthing, BN13 2LR
Reference: MDJAC-24.032-TSS-01
Survey date: 07/05/2024

BS5837:2012 Tree Survey Schedule - Explanatory Notes

This document is based on a site visit and inspection undertaken by Matt Jones of MDJ Arboricultural Consultancy Ltd on Tuesday 7 May 2024; deciduous trees were in full leaf.
The dimensions and assessments of the trees contained within this document reflect their condition at the time of the survey. I surveyed the trees from within the boundaries of the site only. The presence of additional physiological or structural defects that are only visible from restricted-access viewpoints cannot be discounted.

All trees were surveyed from ground level only, aided by the use of binoculars where considered necessary. The information contained within this document does not constitute a full hazard or risk assessment, and therefore MDJ Arboricultural Consultancy Ltd makes no guarantee of their stability of safety.

1. Tree no.
Individual number assigned to the tree for identification, commencing at 1.

2. Species
Common and botanical names are provided. Botanical names are shown in italics.

3. Height
Measured using a clinometer or laser rangefinder, given in metres.

4. Trunk diameter
Trunk diameter measured at 1.5m, unless stated otherwise, in accordance with Figure C.1 of British Standard BS 5837:2012 *"Trees in relation to design, demolition and construction - Recommendations"*.

5. Radial crown spread
Extent of branches from the centre of the trunk to the tips in the principal cardinal directions, rounded up to the closest half metre. For trees with symmetrical canopies, an average measurement is provided.

6. Crown clearance
Height above ground level of the lowest live branch, in metres.

7. Height to first branch
Height above ground level of the origin of the lowest branch, in metres.

8. Age class
Young: recently planted, or yet-to-be established specimen, usually below 10m in height, subject to species characteristics;
Semi-mature: a recently established specimen, usually with excurrent morphology, and yet-to-reach its ultimate proportions, subject to species characteristics;
Mature: fully established, complex, decurrent or broad branching structure, and has achieved or is nearing its ultimate proportions, subject to environmental conditions and species characteristics;
Over-mature: has reached maturity, but is showing symptoms of minor decline within its canopy;
Veteran: has a large trunk diameter for its species, but displays evidence of veteranisation such as fungal colonisation, decay, hollowing, and has commenced retrenchment within its canopy;
Ancient: exceeds the typical size and age of the species, with a very large trunk diameter; with extensive fungal

9. Physiology
General health and biological function, taking into account a healthy specimen of its size, age, species and location.

10. Structure
Structural condition of the tree, based on root (visible portions only), basal, trunk, stem and branch morphology.
Good: No morphological defects and no fungal or bacterial colonisation;
Fair: only minor morphological defects and a very low likelihood of failure; no pathological colonisation;
Poor: irremediable and significant morphological defects, leading to an increased likelihood of failure.

11. Comments
Comments have been made where appropriate.

12. BS5837:2012 Category
Category assigned to the tree, based on its arboricultural quality, arboricultural landscape value and potential, in accordance with Table 1 of British Standard BS 5837:2012 *"Trees in relation to design, demolition and construction -*

13. RPA radius
Radius of the root protection area, based on the trunk diameter of the tree, in accordance with Section 4.6 of British Standard BS 5837:2012 *"Trees in relation to design, demolition and construction - Recommendations"*.

Client name: Narnia Homes Ltd
Site: 51 Mendip Road, Worthing, BN13 2LR
Reference: MDJAC-24.032-TSS-01
Survey date: 07/05/2024

MDJ ARBORICULTURAL CONSULTANCY LIMITED

Table 1: Cascade chart for tree quality assessment

Category and definition	Criteria			Identification on plan
Trees unsuitable for retention				
Category U Those in such a condition that they cannot realistically be retained as living trees in the context of the current land use for longer than 10 years	Trees that have serious, irremediable, structural defect, such that their early loss is expected due to collapse, including those that will become unviable after removal of other category U trees (e.g. where, for whatever reason, the loss of companion shelter cannot be mitigated by pruning) Trees that are dead or are showing signs of significant, immediate, and irreversible overall decline Trees infected with pathogens of significance to the health and/or safety of other trees nearby, or very low quality trees suppressing adjacent trees of better quality			**Red**
Trees to be considered for retention				
	1. Mainly arboricultural qualities	**2. Mainly landscape qualities**	**3. Mainly cultural values, including conservation**	
Category A **Trees of high quality** with an estimated remaining life expectancy of at least 40 years	Trees that are particularly good examples of their species, especially if rare or unusual; or those that are essential components of groups or formal or semi-formal arboricultural features (e.g. the dominant and/or principal trees within an avenue)	Trees, groups or woodlands of particular visual importance as arboricultural and/or landscape features	Trees, groups or woodlands of significant conservation, historical, commemorative or other value (e.g. veteran trees or wood-pasture)	**Green**
Category B **Trees of moderate quality** with an estimated remaining life expectancy of at least 20 years	Trees that might be included in category A, but are downgraded because of impaired condition (e.g. presence of significant though remediable defects, including unsympathetic past management and storm damage), such that they are unlikely to be suitable for retention for beyond 40 years; or trees lacking the special quality necessary to merit the category A designation	Trees present in numbers, usually growing as groups or woodlands, such that they attract a higher collective rating than they might as individuals; or trees occurring as collectives but situated so as to make little visual contribution to the wider locality	Trees with material conservation or other cultural value	**Blue**
Category C **Trees of low quality** with an estimated remaining life expectancy of at least 10 years, or young trees with a stem diameter below 150mm	Unremarkable trees of very limited merit or such impaired condition that they do not qualify in higher categories	Trees present in groups or woodlands, but without conferring on them significantly greater collective landscape value; and/or trees offering low or only temporary/transient landscape benefits	Trees with no material conservation or other cultural value	**Grey**

Client name: Narnia Homes Ltd
Site: 51 Mendip Road, Worthing, BN13 2LR
Reference: MDJAC-24.032-TSS-01
Survey date: 07/05/2024

Tree Survey Schedule

MDJ ARBORICULTURAL CONSULTANCY LIMITED

No.	Common name	Height [m]	Trunk diameter [mm]	Radial Crown Spread [m]	Height to 1st Branch [m]	Crown Clear-ance [m]	Age class	Physi-ology	Structure	Comments	Cate-gory	RPA Radius [m]
T1	Holm oak	8	595	N5.25m E5.25m S4.25m W4.5m	3	1.5	Early-mature	Good	Good	Dense, vigorous canopy. No significant defects. One of few mature trees within the immediate area. Of moderate quality and landscape value.	B (1)	7.14

(est.) denotes estimated dimensions

MDJ ARBORICULTURAL CONSULTANCY LIMITED

Arboricultural ASSOCIATION
Professional Member

APPENDIX 2:
TREE PROTECTION PLAN

15 Windsor Close
Southwater
West Sussex
RH13 9XH

www.mdjac.co.uk | info@mdjac.co.uk

Company Registration No.
(England & Wales): 13900533

MENDIP ROAD

0 5 10 20m

61c
61
4.5m
7.4m
4.9m
7.3m
5.3m
7.5m
6.7m
7.5m
6m
7.2m
5.5m
7.2m
51
4.5m
7.3m
1.6m
2.3m
T1 - Holm oak
7
5.5m
7.3m
5.9m
7.5m
4.9m
7.5m
4.2m
7.8m
4
4.8m
7.9m
MENDIP CRESCENT

Section of temporary tree protection fencing to enclose base of tree, to be installed for remainder of project

Temporary ground protection measures to be installed for remainder of works; see inset panel

Existing timber fencing; to be retained to act as tree protection fencing for duration of construction

Tree Protection Fencing (TPF)

The alternative specification comprises 2m tall, welded mesh panels such as 'heras' panels, set within rubber feet to avoid the need for excavation within the RPAs of retained trees. Individual panels will be joined together using a minimum of two anti-tamper couplers that can only be removed from within the construction exclusion zone. Stabilising struts secured to a base plate with road pins, or to a block tray where fencing is to be erected onto existing hard surfaces, will be incorporated between every other panel.

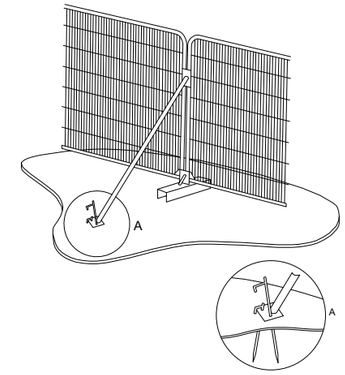

- Category 'B' tree
- Root Protection Areas (RPAs)
- Existing fencing (retained)
- Tree Protection Fencing (TPF)
- Temp. Ground Protection

Drawing History

Rev	Date	Comments

MDJ ARBORICULTURAL CONSULTANCY LIMITED

Copyright: MDJ Arboricultural Consultancy Ltd 2024

Ownership of this drawing and its intellectual property is retained by MDJ Arboricultural Consultancy Limited and should not be reproduced, copied, or distributed, in whole or in part, without prior written consent.

Site:	51 Mendip Road, Worthing, BN13 2LR
Client:	Narnia Homes Limited
Title:	Tree Protection Plan (TPP)
Date:	May 2024
Dwg No:	MDJAC-24.032-TPP-01
Scale:	1:200 @ A3