

BAY WINDOW STUDY - ELEVATION

1:20 SCALE @ A1

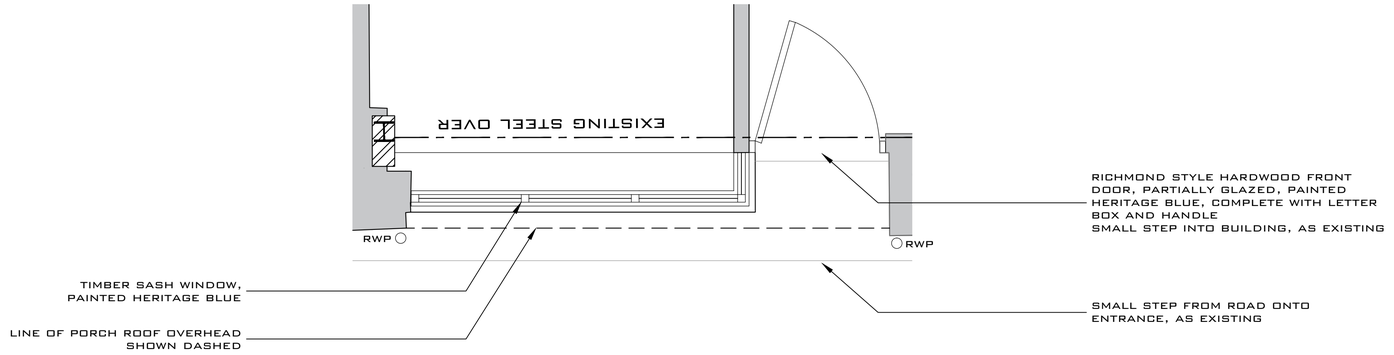

BAY WINDOW STUDY - PLAN

1:20 SCALE @ A1

0M 1M 2M

Scale Bar @ 1:20

Notes:

- DRAWINGS SHOULD ONLY BE SCALED FOR PLANNING PURPOSES. DO NOT SCALE FROM THIS DRAWING FOR CONSTRUCTION PURPOSES.
- ALL DIMENSIONS ARE IN MM, UNLESS STATED OTHERWISE.
- ALL DIMENSIONS TO BE CHECKED ON SITE PRIOR TO CONSTRUCTION OR ORDERING.
- ANY ERRORS OR OMISSIONS TO BE NOTIFIED TO CITYZEN IMMEDIATELY.
- CONTRACTOR TO READ & CHECK ALL MANUFACTURES LITERATURE AND IMPLEMENT ITS REQUIREMENTS PRIOR TO INSTALLATION OF ANY MATERIALS AND COMPONENTS.
- CITYZEN IS NOT RESPONSIBLE FOR ANY BUILDING WORK THAT IS CARRIED OUT ON SITE.
- THIS DRAWING IS TO BE READ IN CONJUNCTION WITH ALL NECESSARY ARCHITECTURAL, STRUCTURAL AND SPECIALIST DRAWINGS, SPECIFICATIONS, SCOPES OF WORK & ROOM DATA SHEETS.
- ALL MATERIALS AND WORKMANSHIP SHALL CONFORM WITH THE RELEVANT BRITISH AND EUROPEAN STANDARD, SPECIFICATIONS AND CODES OF PRACTICE.
- ALL PROPERTY BOUNDARY LINES ARE ASSUMED.
- IF IN ANY DOUBT, ASK.

CDM 2015
Residual Risk

The Contractors shall familiarise themselves with the project and employ systems and methods of working to reduce any hazards

The Contractors shall plan, manage, monitor and coordinate health and safety during the construction phase of a project

If in doubt ask and notify the design team

General

It is assumed that a competent contractor familiar with the works required will be appointed and that they will be aware of the standard hazards.

REV	DATE	REVISION	DRN	CHK	APP

COPYRIGHT CITYZEN LIMITED

CITYZEN ARCHITECTURE | ENVIRONMENT
MARITIME HOUSE
BASIN ROAD NORTH
HOVE
EAST SUSSEX
BN41 1WR
CONTACT@CITYZENDESIGN.CO.UK
WWW.CITYZENDESIGN.CO.UK
01273 915010
CIAT Registered Practice

CLIENT:
Steve Campbell

DESIGNER:
Roman Schnecker

PROJECT:
56 West Street
Shoreham By Sea
BN43 5WG

TITLE:
BAY WINDOW STUDY

SCALE: AS NOTED @ A1

DATE: 04.08.21

PURPOSE OF DRAWING:
PLANNING

DRAWING: PROJECT REF - DRG NO. (REVISION)
2125-BR-556(~)