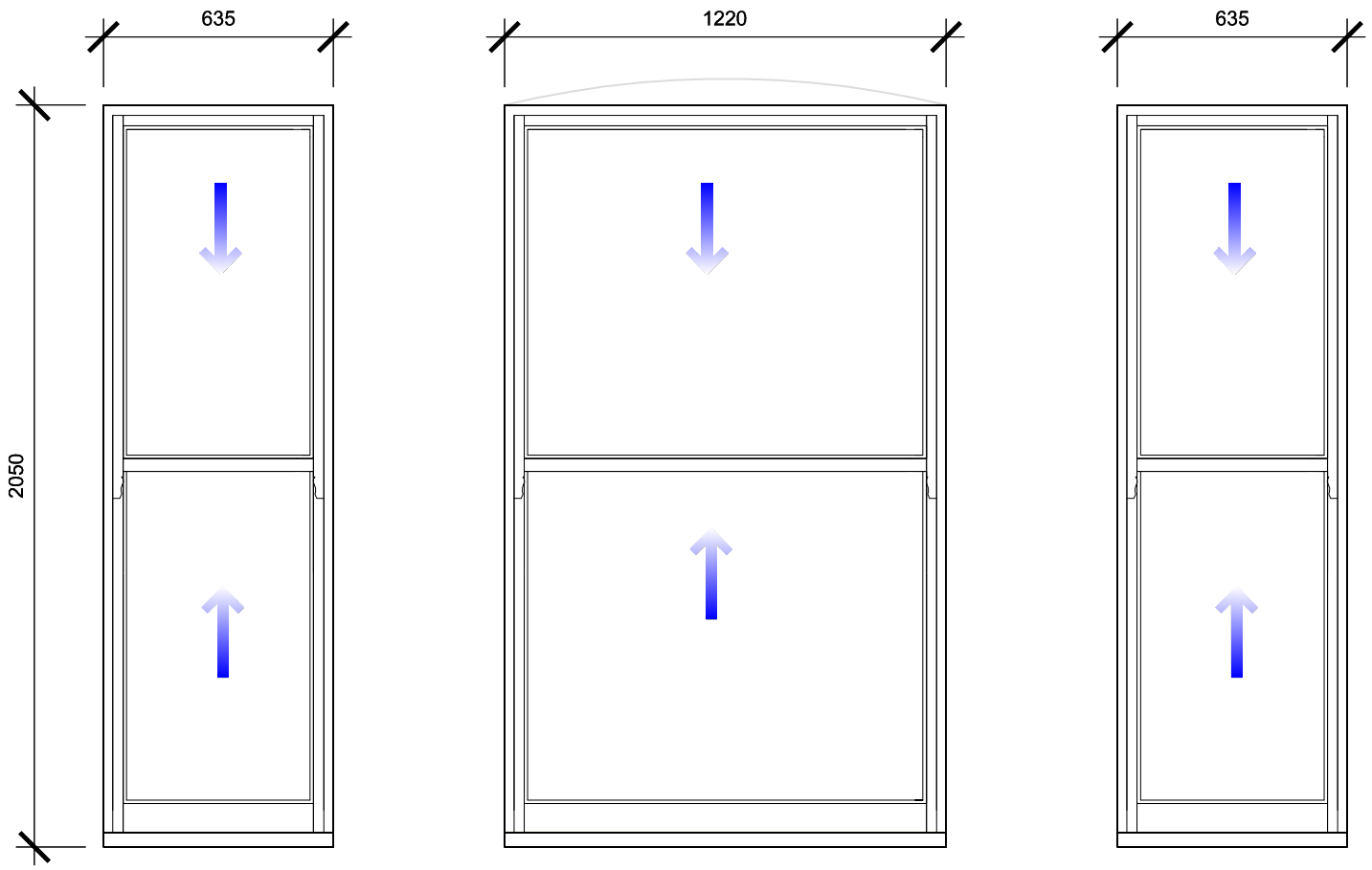

W1 W2 W3

Proposed PVC Vertical sliding windows

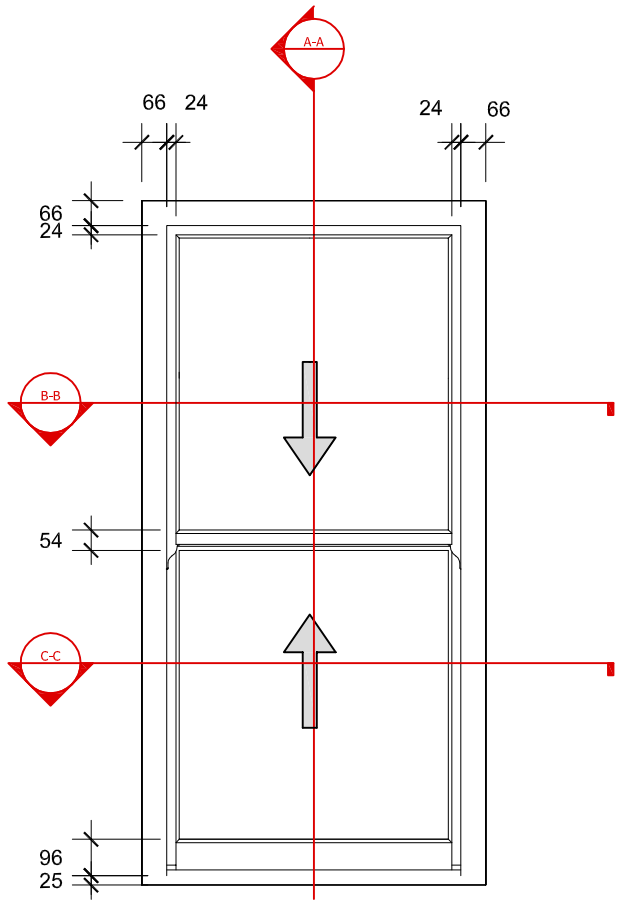

PVC Vertical sliding window details

General Notes:

Do not scale dimensions from this drawing, unless for Planning purposes.

The Contractor is responsible for checking all dimensions on site prior to commencement of the works.

This drawing is to be read in conjuction with the specification.

Profile dimension vertical sliding windows Numbers: 1 2 & 3

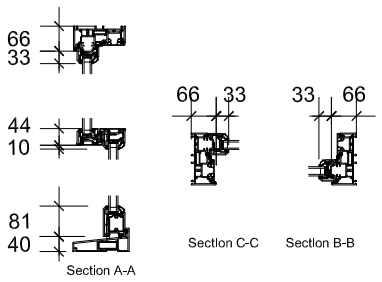

Legacy Narrow profile sections to front elevation.

Revision	Date	Description
A	07/03/2024	Change windows to Vertical sliders

Brian Elstone Surveying Services Ltd
Brian Elstone, MCIOB, IMaPS, FCABE
Building Surveyor and Architectural Consultant
CDM Consultant
1 Herne Court, Station Road, Rustington,
West Sussex, BN16 3BQ
Phone: 01903 784884, Mobile: 07710 593021.
Email: brian@elstone.biz

Client:
Ms P. Sequeira, Flat 3, 112 Marine Parade, Worthing, BN11 3QG

Project:
Replacement windows to Front Elevation.

Drawing Title:
Proposed Windows - Flat 3

Scale:	Date:	Drawn By:
1:20	19/12/2023	BE

Drawing Number:	Revision:
1622/004	A