**General Notes:**

Do not scale dimensions from this drawing, unless for Planning purposes.

The Contractor is responsible for checking all dimensions on site prior to commencement of the works.

This drawing is to be read in conjuction with the specification.

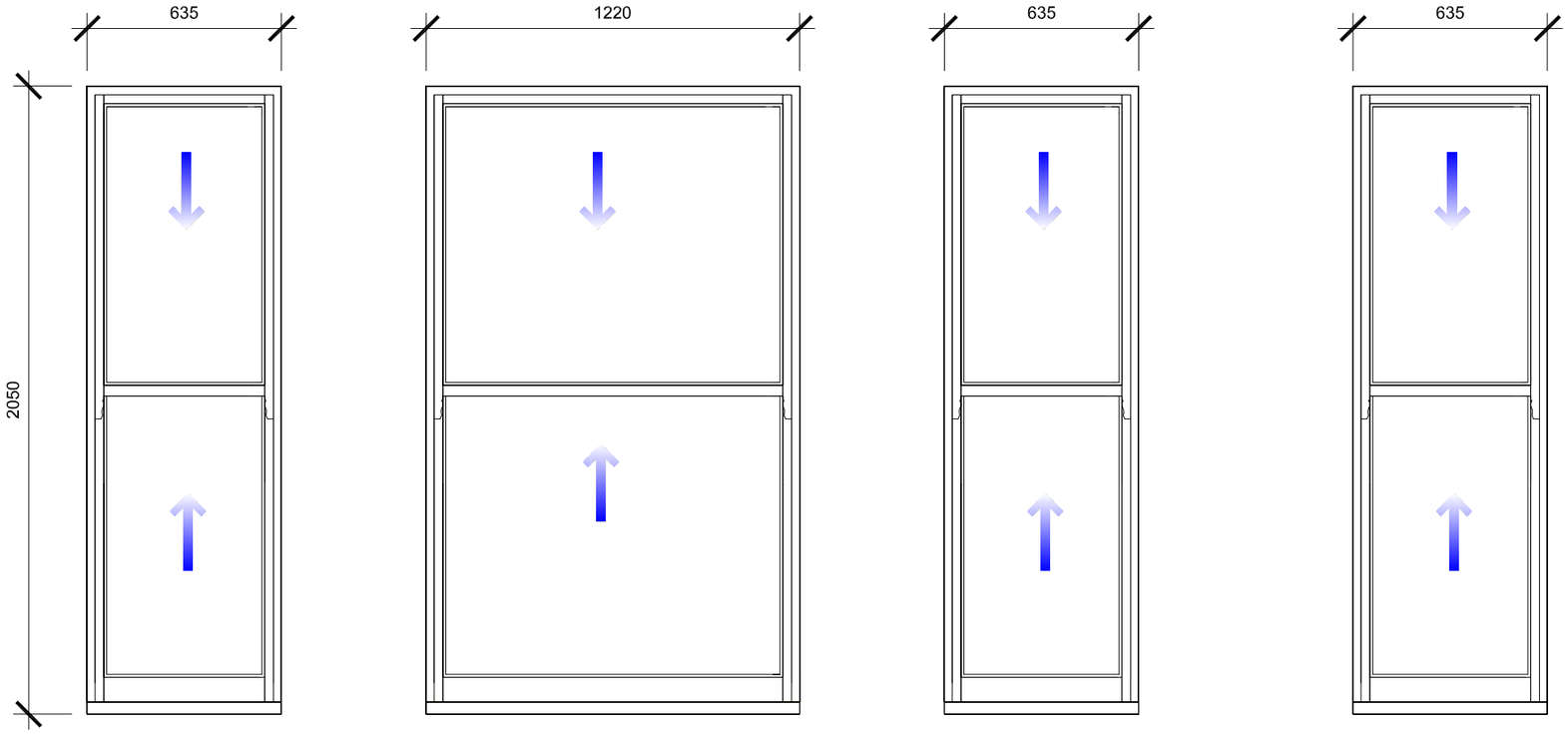


W4 W5 W6 W7

# Proposed PVC Vertical sliding windows

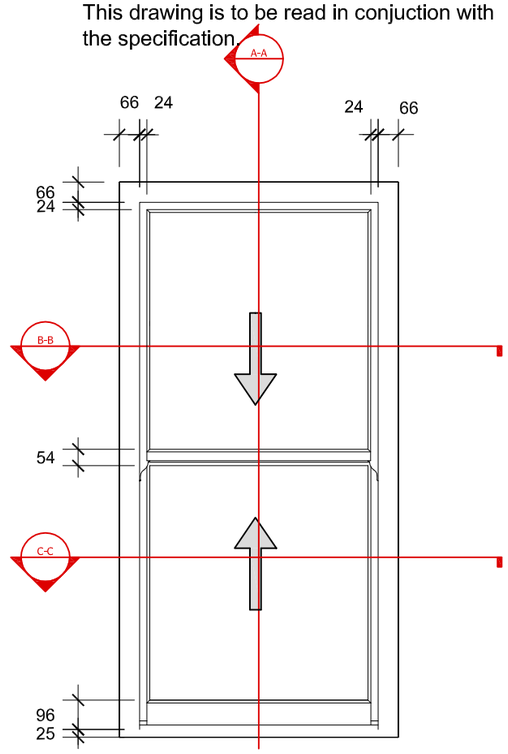


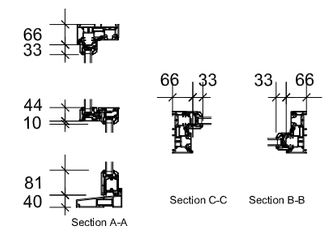


Legacy Range with narrow profile sections to front elevation

| | | |
|---|---|---|
| C | 07/03/24 | Windows changed to Vertical Sliders |
| B | 16/01/24 | Drawing number corrected |
| A | 15/01/24 | Sections added |


**Brian Elstone Surveying Services Ltd**
Brian Elstone, MCIOB, IMaPS, MCABE
Building Surveyor and Architectural Consultant
CDM Consultant

1 Herne Court, Station Road, Rustington,
West Sussex, BN16 3BQ
Phone: 01903 784884, Mobile: 07710 593021.
Email: brian@elstone.biz


Client:
Mr I White, Flat 5, 112 Marine Parade, Worthing, BN11 3QG

Project:
Replacement windows to Front Elevation.

Drawing Title:
Proposed Windows - Flat 5 including General Sections

| Revision | Date | Description |
|---|---|---|

| Scale: | Date: | Drawn By: |
|---|---|---|
| 1:20 | 19/12/2023 | BE |

| Drawing Number: | Revision: |
|---|---|
| 1622/005 | C |