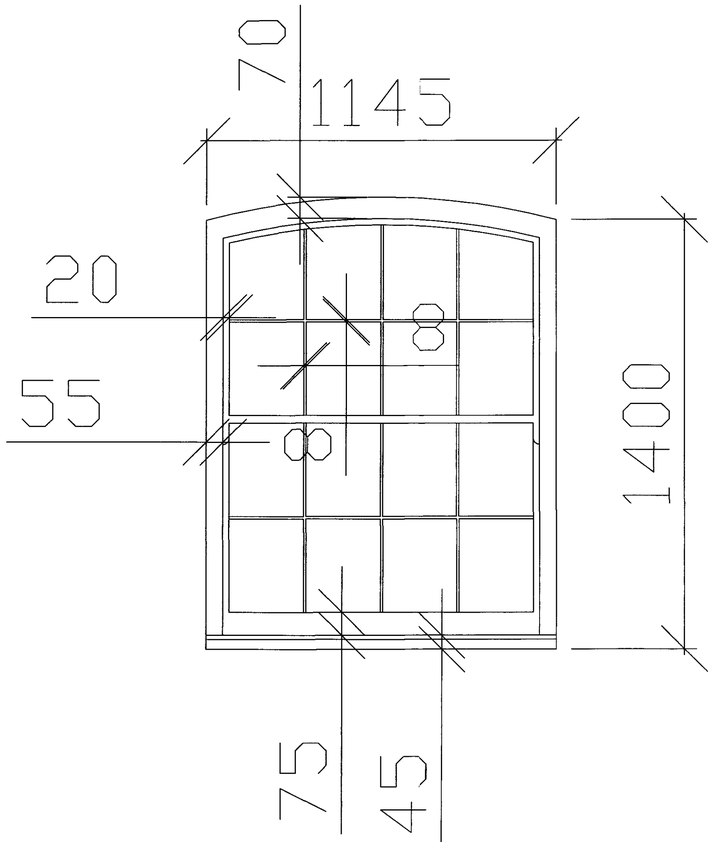

Front Bedroom

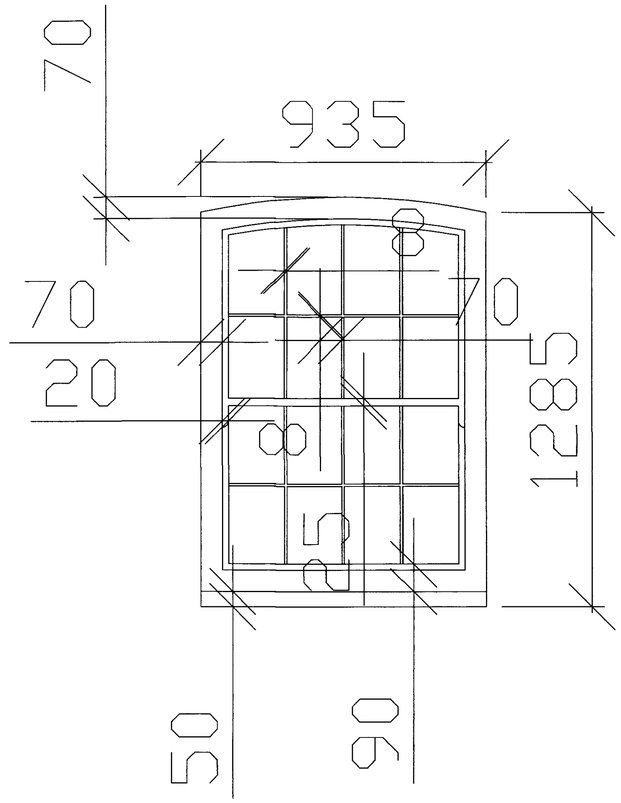

Front Kitchen

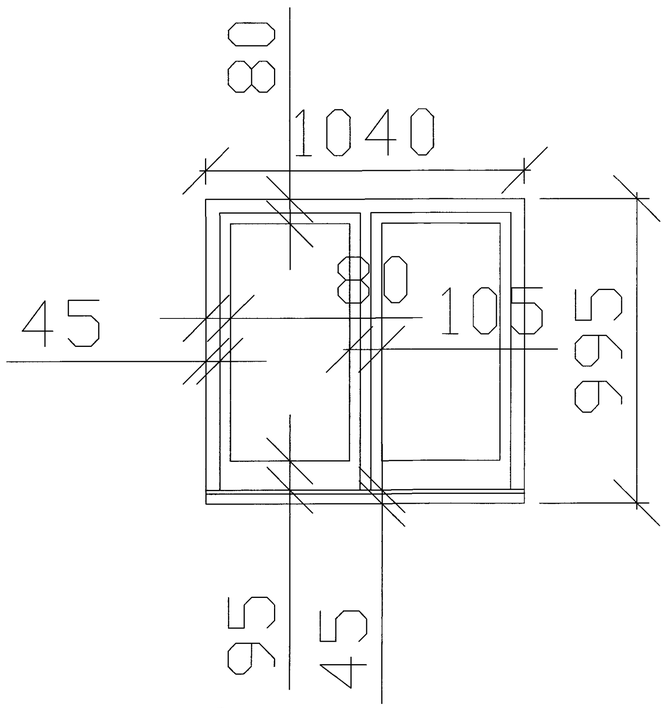

Side Bedroom

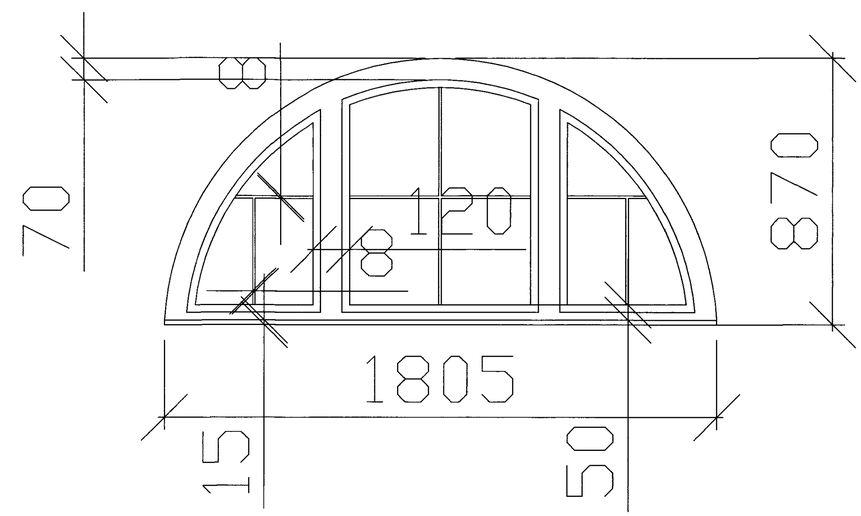

Front Lounge

Tony Rogers
Building Consultant
Address: 40 Dawn Crescent, Upper Beeding, West Sussex, BN44 3WH
Telephone: 01903 815225

Rev.	Date:	Revision Description:

Client:	Mr P Gillman
Address:	2 Stable Mews Hall Avenue Worthing West Sussex
Project:	Proposed replacement windows
Scale:	1:10
Date:	December 2010
Drawing No:	10/635/01
Drawn By:	AWR
Revision:	