

KITCHEN

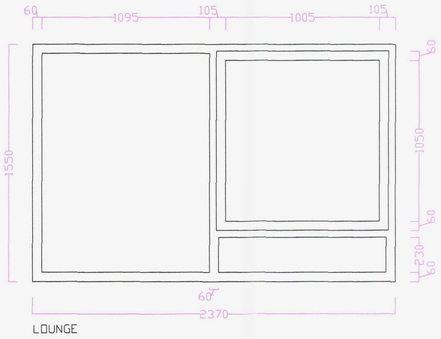

LOUNGE

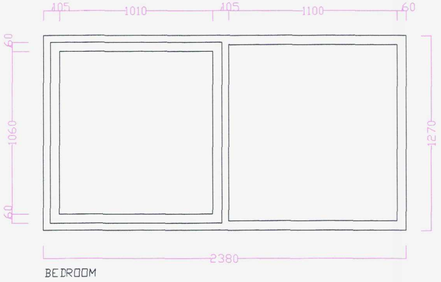

BEDROOM



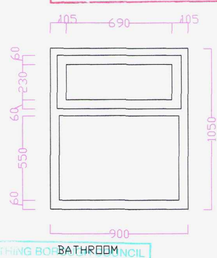

BATHROOM

EXISTING WINDOW DETAIL 1:20

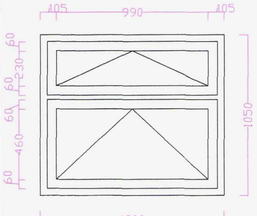

KITCHEN

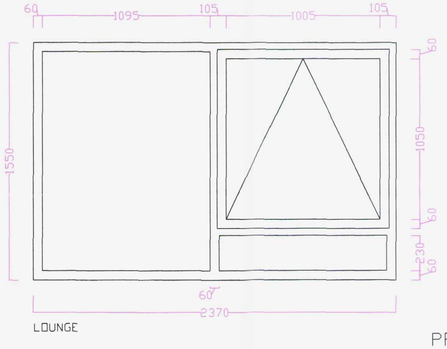

LOUNGE

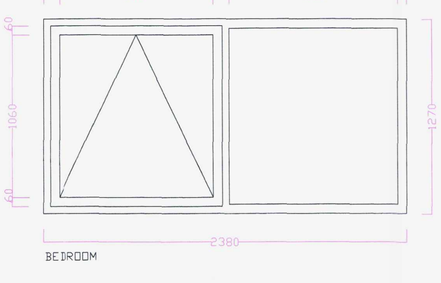

BEDROOM

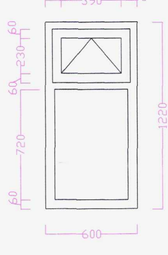

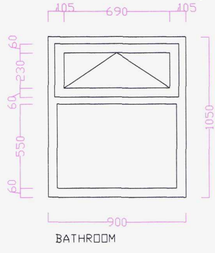

BATHROOM

PROPOSED WINDOW DETAIL 1:20

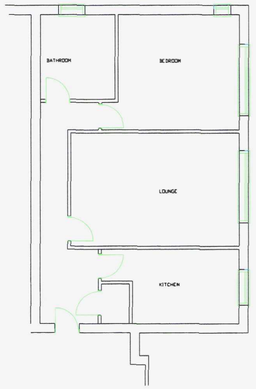

EXISTING FLOORPLANS 1:100

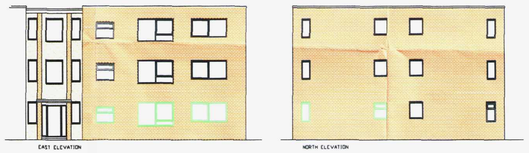

EXISTING ELEVATIONS 1:200

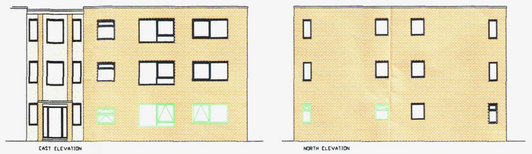

PROPSED ELEVATIONS 1:200

T.P. OFFICE COPY

WORTHING BOROUGH COUNCIL
11 FEB 2008
BOROUGH OF WORTHING
CONSENT GRANTED
SUBJECT TO CONDITION(S)
10.1.08
WB / 07 1416 full

All dimensions to be checked on site prior to commencement of work, except for planning purposes.

This drawing is the copyright of
CALDOTEC LTD
and may not be copied, altered or reproduced in any way without written authority.

CALDOTEC LTD
41 WILLOWHAYNE AVE
EAST PRESTON
WEST SUSSEX
BN16 1PL
Telephone
01903 859176

EXISTING FLOORPLAN, EXISTING & PROPOSED ELEVATIONS AND WINDOW DETAIL
29 Wilmington Court
Worthing
West Sussex BN11 3QN

CLIENT Williams

Issue	Details	By	Date

SCALE AS SHOWN
DATE 09/01/08
DRAWING NUMBER 7127 01