DISTRICT COUNCIL
PLANNING DIVISION
APPN NO. AWD/0221/07
DATE RECEIVED 12 APR 2007

# Householder Application

## A1. Applicant Details

| | | | |
|---|---|---|---|
| **Organisation** | | | |
| | **Title** | **Forename** | **Surname** |
| **Name** | mr | graham | sweet |

## A1.1 Address Details

| | |
|---|---|
| **Name or flat number** | |
| **Property number or name** | 40 |
| **Street** | Franklin Road |
| **Locality** | |
| **Town** | Shoreham |
| **County** | West Sussex |
| **Postal Town** | |
| **Postcode** | BN43 6YD |

## A1.2 Communication Details

| | **Telephone No.** | **Extn No.** |
|---|---|---|
| **Telephone No.** | | |
| **Daytime Telephone No.** | | |
| **Fax No.** | | |
| **Email Address** | | |
| **DX Number** | | |

# A2. Agent Details

| | |
|---|---|
| **Organisation** | meloy architects |

| | **Title** | **Forename** | **Surname** |
|---|---|---|---|
| **Name** | mr | charles | meloy |

## A2.1 Address Details

| | |
|---|---|
| **Name or flat number** | 19b |
| **Property number or name** | |
| **Street** | Camelford Street |
| **Locality** | |
| **Town** | Brighton |
| **County** | East Sussex |
| **Postal Town** | |
| **Postcode** | BN2 1TQ |

## A2.2 Communication Details

| | **Telephone No.** | **Extn No.** |
|---|---|---|
| **Telephone No.** | 07931284708 | |
| **Daytime Telephone No.** | | |
| **Fax No.** | | |

| | |
|---|---|
| **Email Address** | charles.m@meloy.co.uk |
| **DX Number** | |

# 1. Site Address Details

## 1.1 Address Details

| | |
|---|---|
| **Name or flat number** | |
| **Property number or name** | 40 |
| **Street** | Franklin Road |
| **Locality** | |
| **Town** | Shoreham-by-Sea |
| **County** | West Sussex |
| **Postal Town** | |
| **Postcode** | BN43 6YD |
| **UPRN** | 060012030 |
| **Location** | |

# 2. Description of the Proposed Development

**Development Description**

Resubmission for the conversion of loft space into a habitable room. Proposed dormer to the rear elevation and half hipped roof extension. Insertion of velux window into the South facade

# 3. Access

| | | | |
|---|---|---|---|
| **Is existing access affected?** | **Pedestrian** | _ Yes | X No |
| | **Vehicular** | _ Yes | X No |
| **Is a new access type proposed?** | **Pedestrian** | _ Yes | X No |
| | **Vehicular** | _ Yes | X No |

**Disability Access**

# 4. Other Information

**Does the proposal involve the lopping or topping of trees or the removal of trees, shrubs or hedges?** _ Yes X No

# 5. Public Rights Of Way

**Do you propose to alter or divert a Public Right of Way?** X Yes _ No

**Is the site adjacent to a Public Right Of Way?** X Yes _ No

**Describe the proposed alteration of the Public Right of Way**

## 6. Materials

**Walls**

Rendered pebble dash to match existing. Tile hung facade to dormer. Windows to match existing

**Roof**

3 layer felt roof

**Site boundaries (fences, walls, etc.), driveways, paved areas and other hard surfaced areas**

N/A

## 7. Floor Space

**Please state the existing floorspace of the building**

89

**sq.m**

**Please state the proposed new floorspace**

115

**sq.m**

**Signature** **Electronically submitted; no signature required.**

# Certificate A

**I certify that:**
**on the day 21 days before the date of the accompanying application nobody, except the applicant, was the owner of any part of the building/land to which the application relates.**

## Signatory

| | Title | Forename | Surname |
|---|---|---|---|
| **Signatory** | mr | graham | sweet |
| **Signature** | **Electronically submitted; no signature required.** | | |
| **Date (yyyy-mm-dd)** | 2007-01-06 | | |

**Under the provisions of the Planning Acts, if any person issues a certificate which purports to comply with the requirements of this Act and contains a statement which he knows to be false or misleading in a material particular, he shall be guilty of an offence. Please ensure that the information you have provided is accurate.**

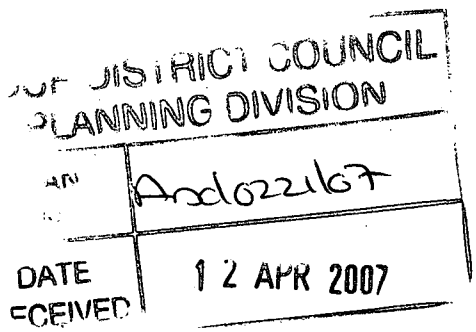

# Agricultural Holdings Certificate

**X** None of the land to which the application relates is, or is part of, an agricultural holding. **_** I have/the applicant has given the requisite notice to every person other than my/him/herself who, on the day 21 days before the date of this application was a tenant of an agricultural holding on all or part of the land to which the application relates as follows:

## Signatory

| | Title | Forename | Surname |
|---|---|---|---|
| **Signatory** | mr | graham | sweet |
| **Signature** | **Electronically submitted; no signature required.** | | |
| **Date (yyyy-mm-dd)** | 2007-01-06 | | |

**Under the provisions of the Planning Acts, if any person issues a certificate which purports to comply with the requirements of this Act and contains a statement which he knows to be false or misleading in a material particular, he shall be guilty of an offence. Please ensure that the information you have provided is accurate.**



notes
These drawings are for planning purposes and building regulations purposes only and are not issued for construction

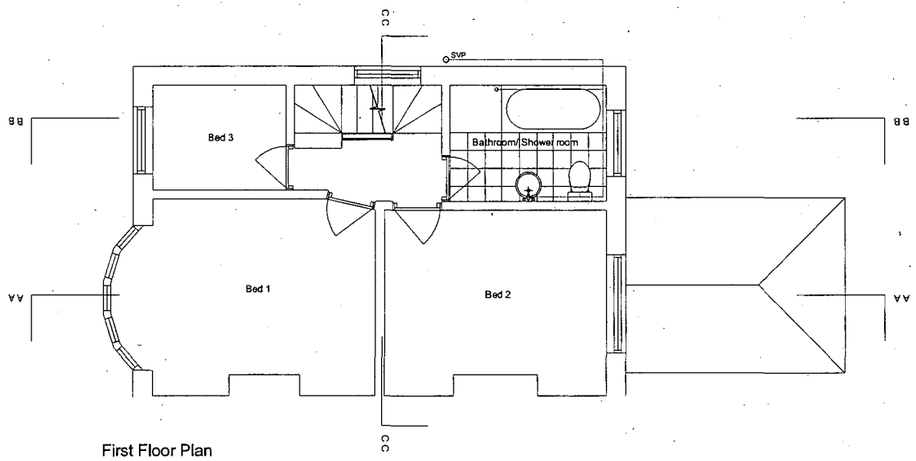


First Floor Plan
1:100 @ A3

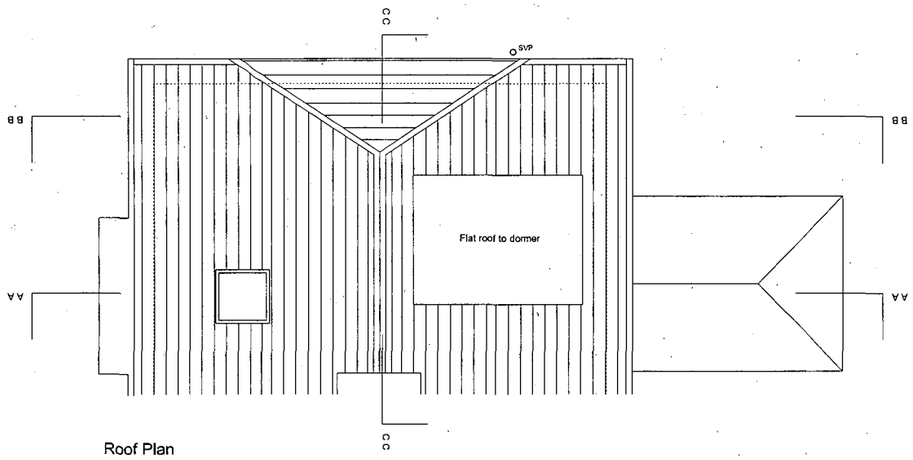


Roof Plan
1:100 @ A3

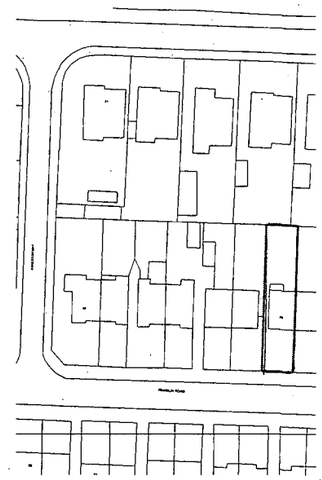

Site Plan
1:1250 @ A3

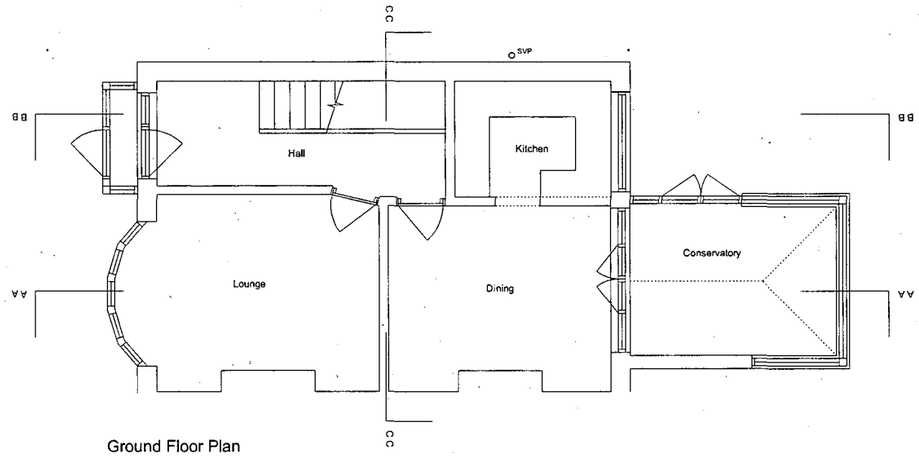


Ground Floor Plan
1:100 @ A3

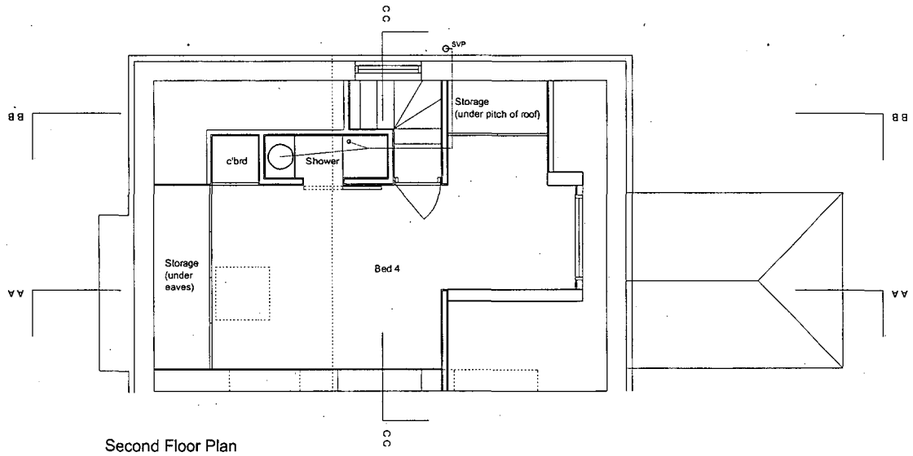


Second Floor Plan
1:100 @ A3

DISTRICT COUNCIL
PLANNING DIVISION
PLAN NO: Ancl0221/01
DATE RECEIVED 12 APR 2007

**Building Regulation Notes**

This drawing is to be read in conjunction with structural engineers calculations and recommendations.
Any foundations, walls, columns, beams and lintels taking additional loads are to be exposed and checked for adequacy prior to commencement of works.
Careful inspection is to be carried out prior to the removal of any structural elements to ensure proper and adequate support is provided and maintained by new works.
All building work is to be carried out in accordance with all current building regulations and codes of practice in force at this time.
Any parts of the structure covered over or inaccessible have not been inspected and no responsibility is accepted for these areas including underground.
No work is to encroach over the boundary of the neighbours property.
All electrics, heating, plumbing, decoration to be altered/ extended to clients choice.
These notes are for building regulations purposes only and do not represent detail specification for construction purposes.
All lengths of proposed beams are to be measured on site prior to ordering, to verify structural engineers dimensions.
The property owner is reminded to serve a party structure notice on any adjoining owner should they need to do so under the requirements of the party wall act 1996.

**Pitched Roof**
Any new tiles needed are to match existing on 25x38mm sw treated battens on type 1F sarking felt to BS747 on SC3 grade rafters at max 400mm centres. Fascia to match existing with soffit fitted with continuous 25mm vent and fly proof screen.
Roof Construction (0.20 W/m2k)
1 layer of celotex tuff r zero ga3000z between rafters with 50mm air gap.
1 layer of 45mm celotex tuff r zero ga3000z inside rafters.
12.5mm Gyproc wallboard duplex lining with skim finish. Note: Insulation to run down to eaves.
New ventilated ridge tile to provide continuous 5mm air gap along ridge.

**Dormer Cheeks**
Code 4 lead cladding on 18mm WBP ply/OSB sheathing board on 100x50mm timber framing with 100mm rockwoll insulation between. 12.5mm Gyproc Wallboard Duplex wall lining with skim finish.

**Dormer roof** (U-Value0.25W/m²K)
Roof to be mastic asphalt roof finish on 18mm WPB ply decking on Timber firings 25-75mm on Timber joists to engineers details.Two layers of 75mm Cellotex Tuff-R Zero GA3000Z between rafters with *min 50mm airspace maintained above insulation.*

**Rooms in the Roof (3 Storey)**
To upgrade to the 1/2 hour fire resistance required provide minimum 100mm mineral fibre insulating material laid between and fixed to the joists. Nails or staples should penetrate into the joist sides to minimum of 20mm. New floor to be half hour fire resisting. New floor to be 2 layers baord material (minimum 8mm thickness), Resilient layer insulation to be 60kg/m3-110kg/m3 (minimum 35mm thick) on joists to structural specification.

**Bedroom shall have -**
- windows at least 850mm high (maximum 1100mm high) and 500mm wide when open located to allow access by ladder from the ground. All light fittings to be fire resistant.
All doors marked fd to be 1/ 2 hour fire resisting and self closing with 25mm stops glued and screwed to frame. Any doors marked SC to be selfclosing.

**Internal partitions**
Partitions to be 50mm stud with 1 layer of 12.5mm wallboard each side at 600mm centres with 50mm Gypglas 1200 insulation between studs. (note: moisture resistant wallboard to be used on bathroom side and reinforcement to be provided in the form of 10mm ply to bathroom walls to allow fitting of appliances, etc)

**Stair Case**
Stair to comprise of 12 risers no greater than 220mm high. (new storey height to be checked on site).
*Treads to be 255mm. Handrails to be 900-1000mm above pitch of stairs.*

**Heating and Hot water system**
Heating to be controlled via thermostats and thermostatic radiator valves.

**Foul Water Drainage**
Proposed drainage shown is indicative only. New and existing drainage to be determined on site and agreed between client and contractor and to be to the satisfaction of the Building Control Officer.
*Existing discahrge stack to be extended to allow for a connection from new dormer shower room.*
All fittings to be provided with trapped waste pipes as follows :
Shower: 50mm diameter (minimum 1/18 fall)
Wash Hand Basin: 50mm diameter (minimum 1/18 fall)
WC: 100mm diameter. All traps to be 75mm deep seal & all waste pipes are to be fitted with rodding access on tight bends.

**Windows/ Ventilation**
Windows to provide openable ventilation area of not less than 1/20th of the floor area of the rooms which they serve, all fitted with minimum 8000m2 trickle ventilator Shower room to be provided with an extract fan capable of extracting not less than 15 litres per second, operated intermittently and ducted to external air. Mechanical vent to be ducted to outside and to include cowl and all necessary weathering. Provide a 10mm air gap under doors for background ventilation.

**Electrical Works**
All electrical works required to meet requirements of part P (Electrical safety)
New electrical layout to be agreed between client and contractor. New sockets to generally be 400mm above finished floor level. New switches to be generally 1200mm above finished floor level. New low energy light fittings to new ceilings.

**Smoke Detectors**
At least one number mains operated self-contained smoke alarm to BS 5446: Part 1 to be installed in the circulation space of each storey. Smoke to be fitted in the lounge and 1st floor lobby. Smoke *alarms should not be installed within 300mm of a light fitting. If wall mounted smoke alarms should not* be over a radiator and should be fitted elsewhere within 150 to 300mm of the ceiling.

**Internal Glazing**
Internal glazing to shower room to be fire rated to 60minutes integrity.

| | | |
|---|---|---|
| revision B | 11.04.2007 | Dormer reduced in size, half hipped gable lowered |
| revision A | 26.02.2007 | Dormer reduced in size, half hipped gable introduced |

project
40 Franklin road
client
Graham and Julie Sweet
drawing title
Proposed Plans
drawing number
0100/PA/104
date
06.01.07
scale
1:50@A1 / 1:100@A3
purpose
Issued for Planning/Building Regulations
revision
B

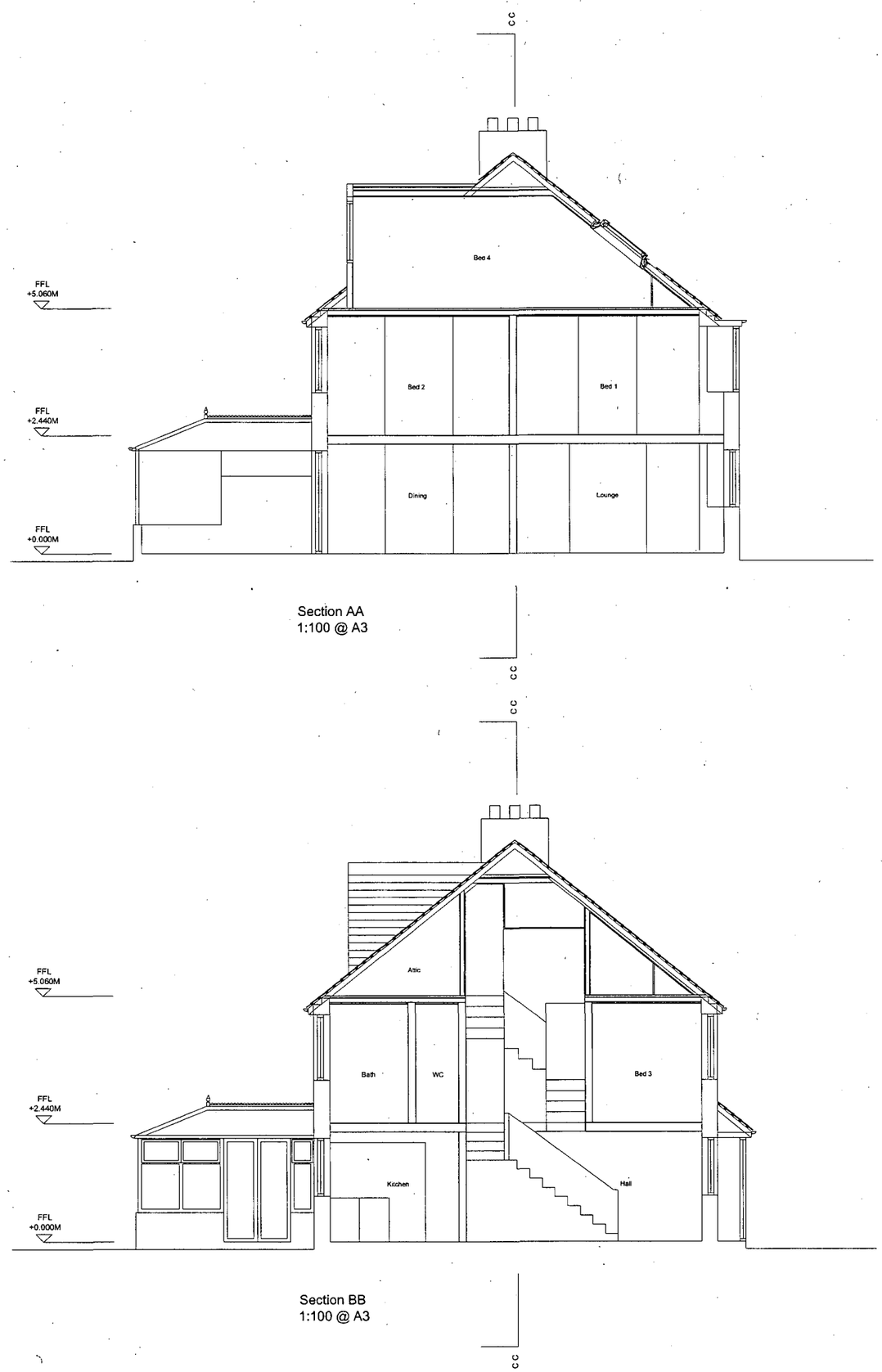


Section AA
1:100 @ A3

Section BB
1:100 @ A3

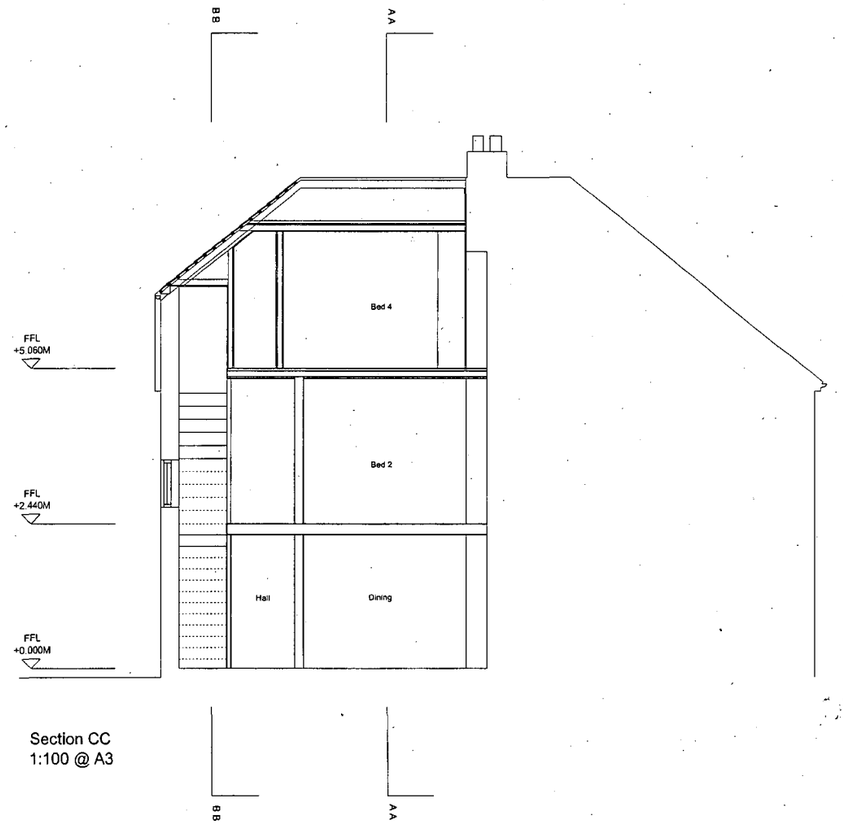


Section CC
1:100 @ A3

notes

These drawings are for planning purposes and building regulations purposes only and are not issued for construction

For building regulations notes please refer to drawing 100/PA/104


DISTRICT COUNCIL
PLANNING DIVISION
PLAN NO. Ano6221/07
DATE RECEIVED 12 APR 2007


| | | |
|---|---|---|
| revision B | 11.04.2007 | Dormer reduced in size, half hipped gable lowered |
| revision A | 26.02.2007 | Dormer reduced in size, half hipped gable introduced |

project
40 Franklin road

client
Graham and Julie Sweet

drawing title
Proposed Sections

drawing number
0100/PA/105

date
06.01.07

scale
1:50@A1 / 1:100@A3

purpose
Issued for Planning/Building Regulations

revision
B

notes

These drawings are for planning purposes and building regulations purposes only and are not issued for construction

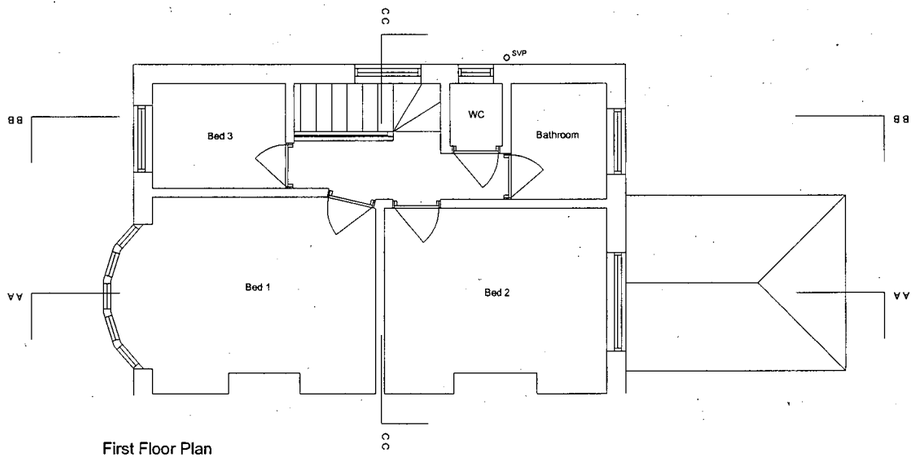


First Floor Plan
1:100 @ A3

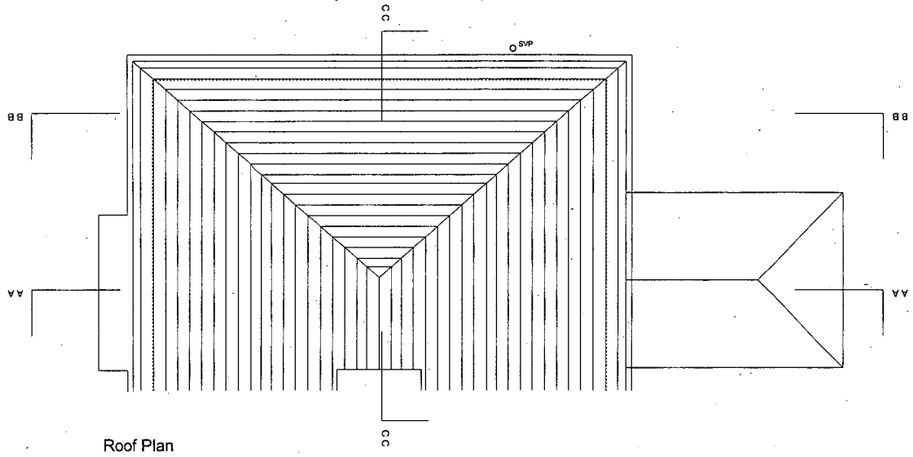


Roof Plan
1:100 @ A3

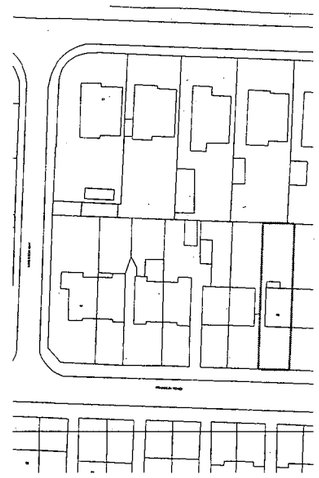

Site Plan
1:1250 @ A3

DISTRICT COUNCIL
PLANNING DIVISION
PLAN NO 06/0221/07
DATE RECEIVED 12 APR 2007

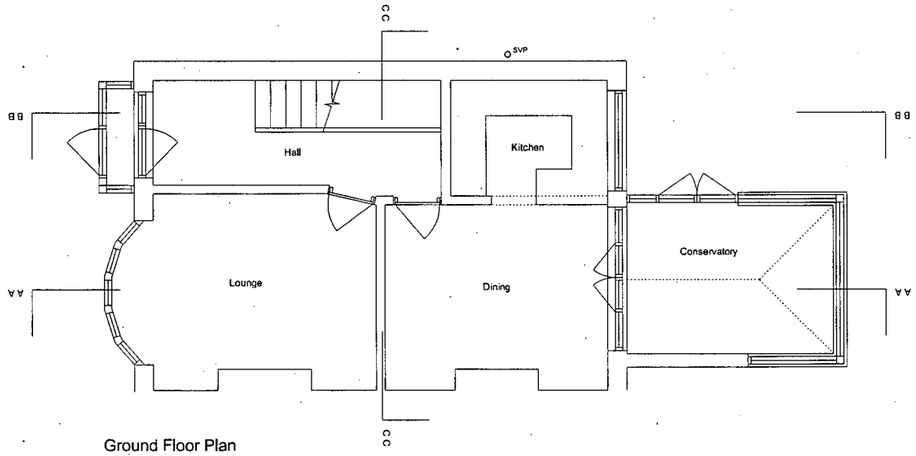


Ground Floor Plan
1:100 @ A3

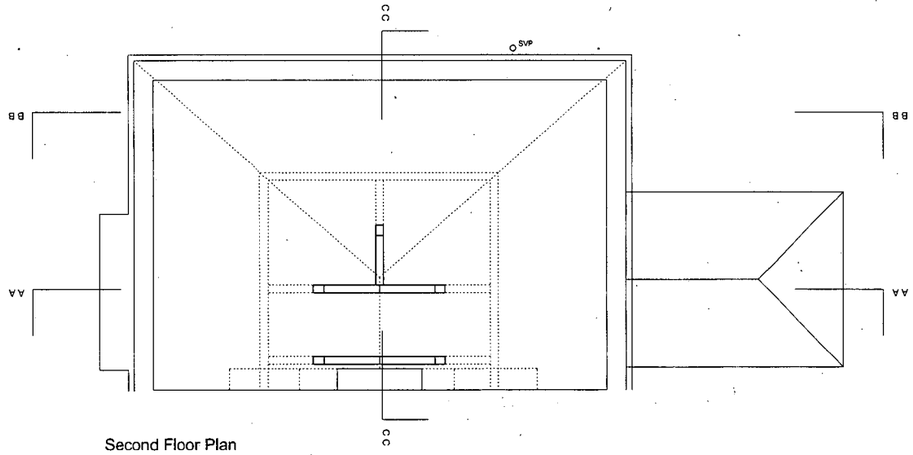


Second Floor Plan
1:100 @ A3

revision B 11.04.2007 Dormer reduced in size, half hipped gable lowered

revision A 28.02.2007 Dormer reduced in size, half hipped gable introduced

project
40 Franklin road

client
Graham and Julie Sweet

drawing title
Existing Plans

drawing number
0100/PA/101

date
06.01.07

scale
1:50@A1 / 1:100@A3

purpose
Issued for Planning/Building Regulations

revision
B

notes

These drawings are for planning purposes and building regulations purposes only and are not issued for construction




South Elevation
1:100 @ A3

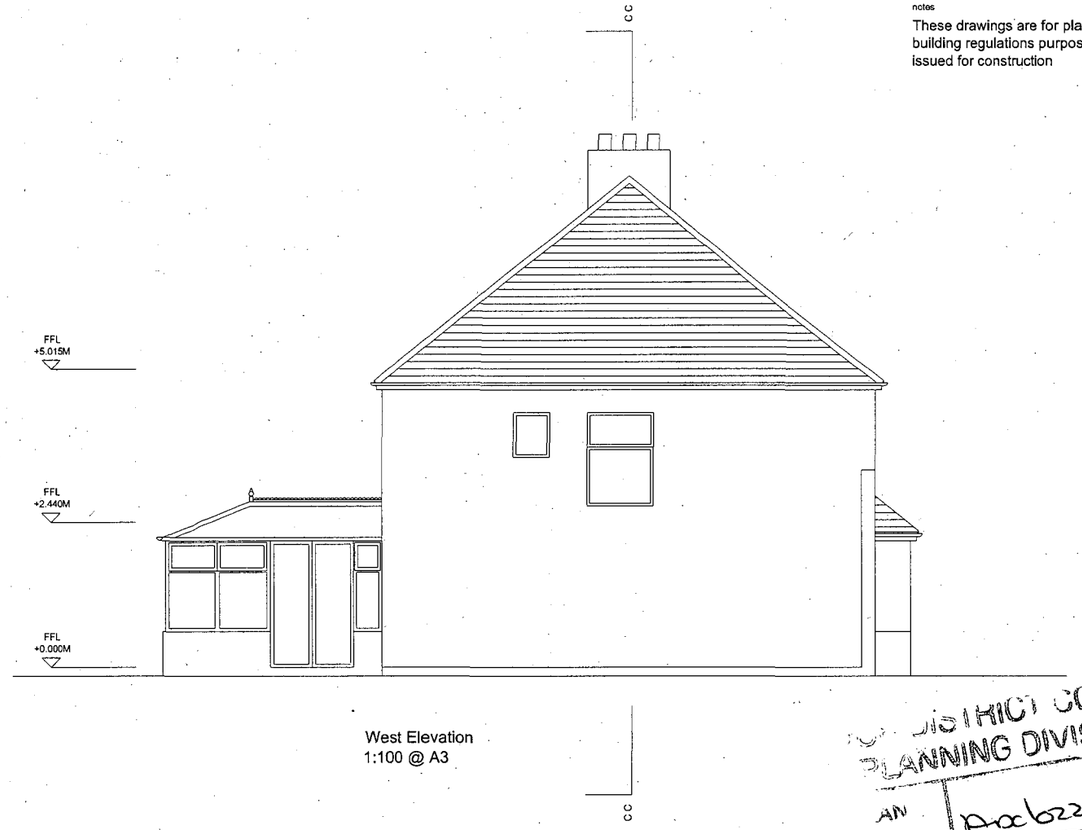


West Elevation
1:100 @ A3

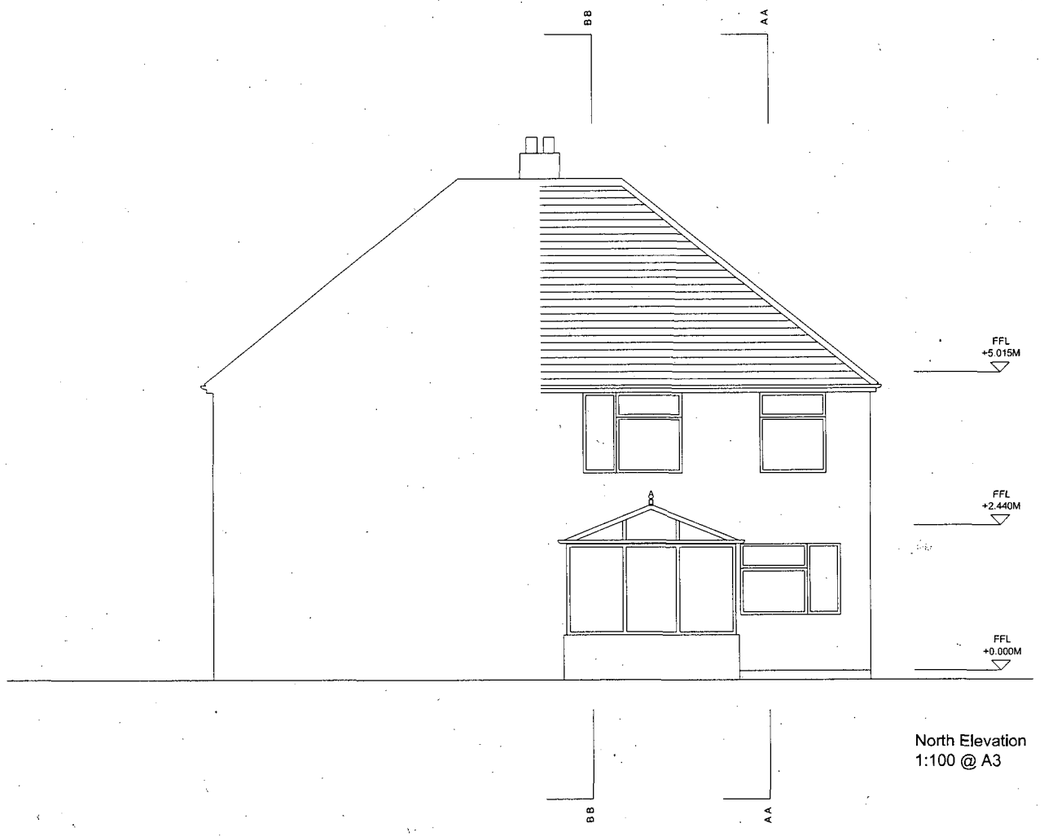


North Elevation
1:100 @ A3


DISTRICT COUNCIL
PLANNING DIVISION
AN
NO
Ax622167
DATE
ECEIVED
12 APR 2007


| | | |
|---|---|---|
| revision B | 11.04.2007 | Dormer reduced in size, half hipped gable lowered |
| revision A | 26.02.2007 | Dormer reduced in size, half hipped gable introduced |

project
40 Franklin road

client
Graham and Julie Sweet

drawing title
Existing Elevations

drawing number
0100/PA/103

date
06.01.07

scale
1:50@A1 / 1:100@A3

purpose
Issued for Planning/Building Regulations

revision
B

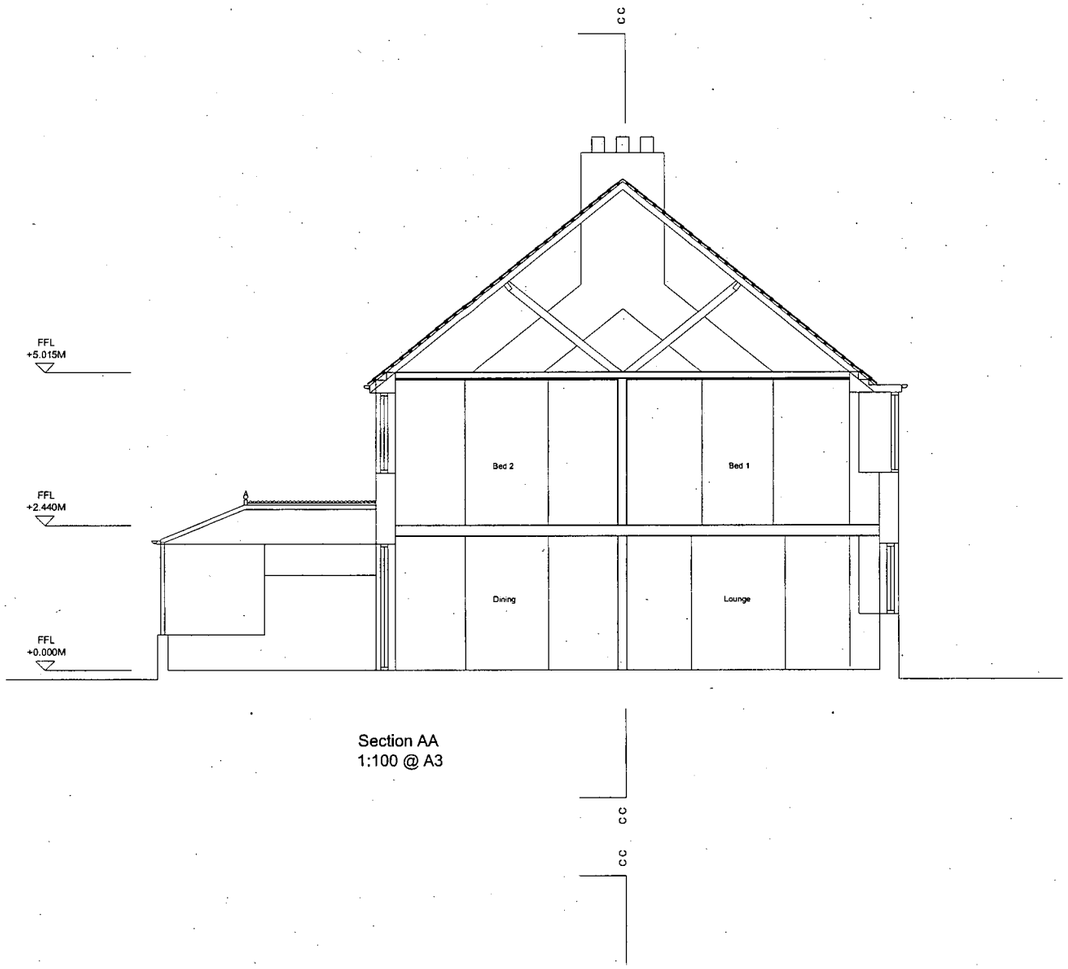


Section AA
1:100 @ A3

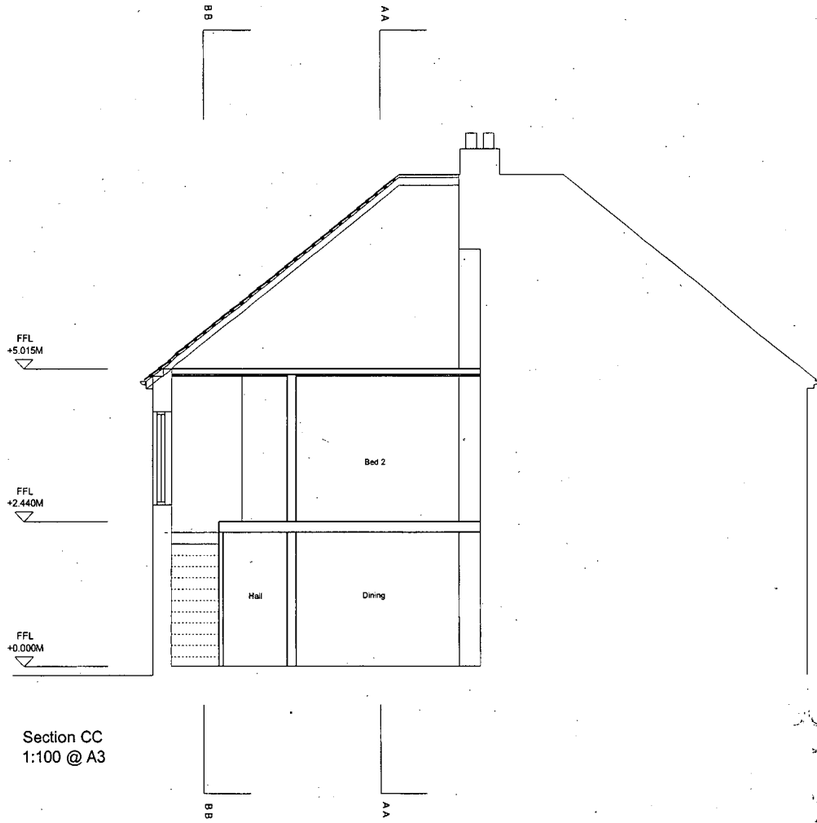


Section CC
1:100 @ A3

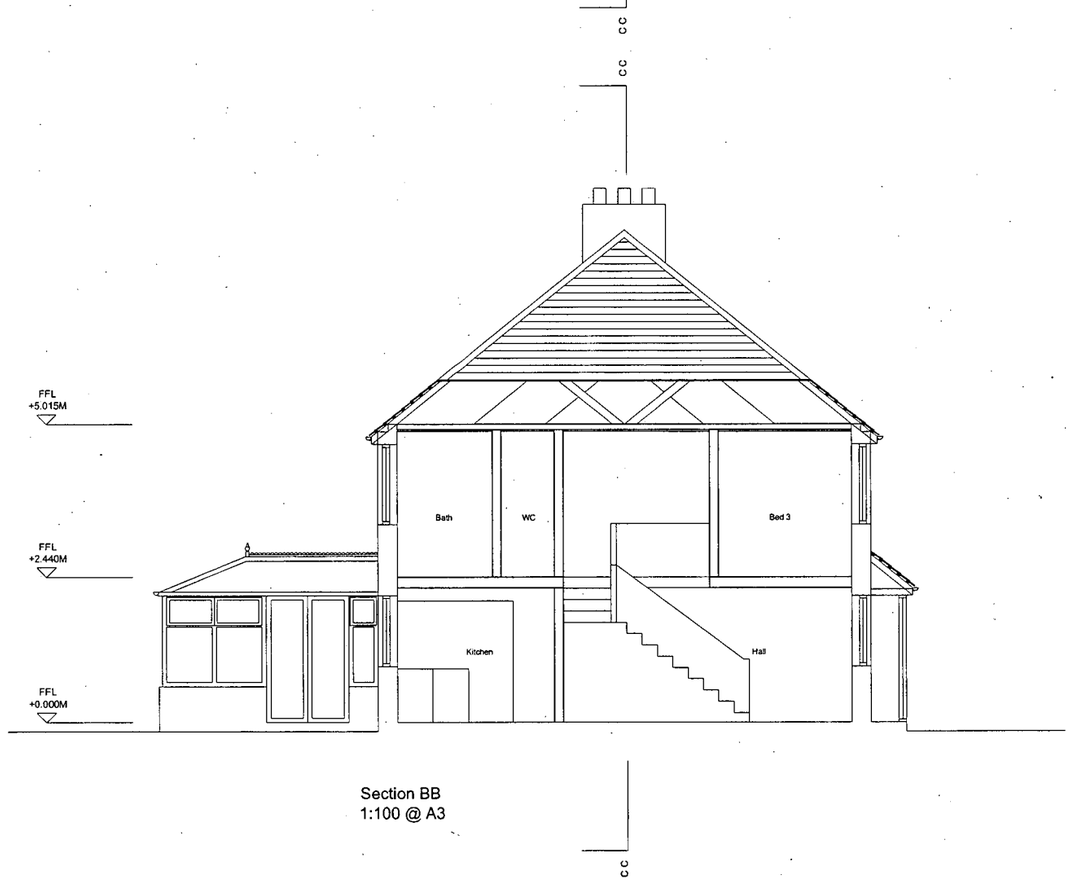


Section BB
1:100 @ A3

notes
These drawings are for planning purposes and building regulations purposes only and are not issued for construction


DISTRICT COUNCIL
PLANNING DIVISION
PLAN NO. Apc622167
DATE RECEIVED 12 APR 2007


| | | |
|---|---|---|
| revision B | 11.04.2007 | Dormer reduced in size, half hipped gable lowered |
| revision A | 26.02.2007 | Dormer reduced in size, half hipped gable introduced |

project
40 Franklin road

client
Graham and Julie Sweet

drawing title
Existing Sections

drawing number
0100/PA/102

date
06.01.07

scale
1:50@A1 / 1:100@A3

purpose
Issued for Planning/Building Regulations

revision
B

notes

These drawings are for planning purposes and building regulations purposes only and are not issued for construction

For building regulations notes please refer to drawing 100/PA/104




South Elevation
1:100 @ A3

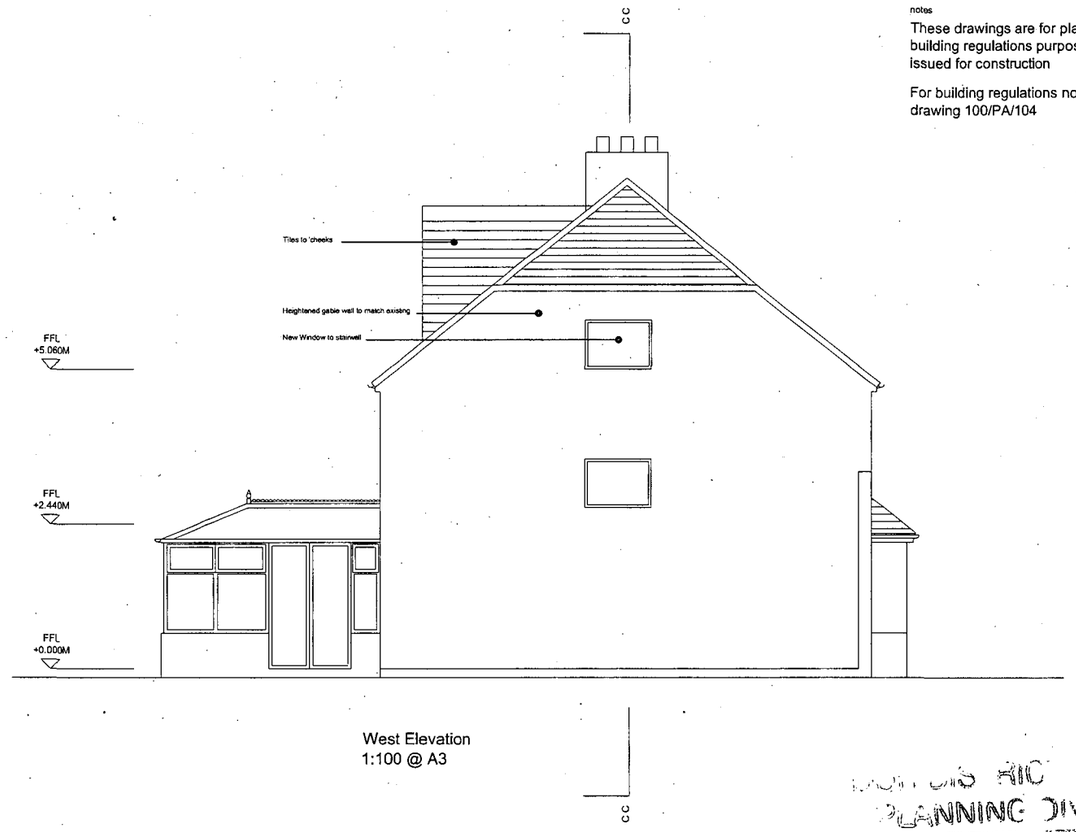


West Elevation
1:100 @ A3

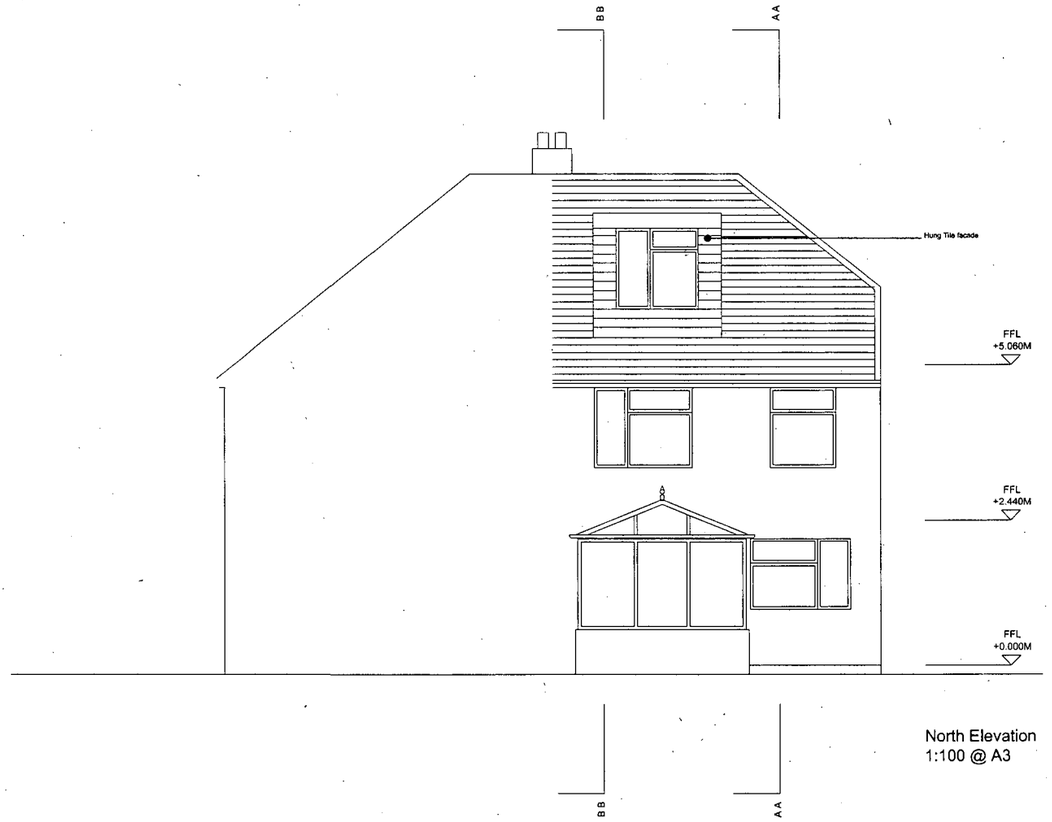


North Elevation
1:100 @ A3


DISTRICT COUNCIL
PLANNING DIVISION
PLAN NO Ans/0221/07
DATE RECEIVED 12 APR 2007


| | | |
|---|---|---|
| revision B | 11.04.2007 | Dormer reduced in size, half hipped gable lowered |
| revision A | 26.02.2007 | Dormer reduced in size, half hipped gable introduced |

project
40 Franklin road

client
Graham and Julie Sweet

drawing title
Proposed Elevations

drawing number
0100/PA/106

date
06.01.07

scale
1:50@A1 / 1:100@A3

purpose
Issued for Planning/Building Regulations

revision
B