Form Ref. No. 275133

DISTRICT COUNCIL

# APPLICATION FOR CONSENT TO DISPLAY ADVERTISEMENTS

Town and Country Planning Act 1990
Town and Country Planning (Control of Advertisements) Regulations 1992

UP DISTRICT COUNCIL
PLANNING DIVISION
AN Ad023010
DATE RECEIVED 16 APR 2007

Please read the notes before you fill in this form.

**1 Applicant**

| | |
|---|---|
| Title | Subway Realty Ltd |
| Forenames | |
| Surname | |
| Address | 32 High Street<br>Shoreham<br>Sussex<br>BN43 5DA |
| Telephone | |
| Work | |
| Fax | |
| Email | |

**Agent (if any)**

| | |
|---|---|
| Title | Mr |
| Forenames | Brian |
| Lastname | Piner |
| Address | 28a<br>Ridgeway Crescent<br>Tonbridge<br>Kent<br>TN10 4NP |
| Telephone | 07957675009 |
| Work | 01732 359801 |
| Fax | 01732 355245 |
| Email | brian@Douglassg.co.uk |

**2 Please give the address or location of the site for the advertisements.**
(You must provide plans showing the exact position)

| | |
|---|---|
| Address | 32<br>High Street<br><br>Shoreham<br>Sussex<br>BN43 5DA |
| Location | As ATTACHED |

**3 Please number your plans and write the numbers and scales against the titles here**
(Please see note 7)

| | Number | Scale |
|---|---|---|
| Location Plan | A | 1:1250 |
| Block Plan | [illegible] | |
| Elevation | | |
| Detailed Plans | | |

Please enclose four copies of this form and four sets of plans.

**4 Does the applicant own or lease the land?** No

If "No" does the applicant have the owner's permission to display the advertisements, or the permission of another person who can allow the applicant to use the land to display the advertisement? Yes

5 Are the advertisements already being displayed? No

If "Yes", please give the date they were first displayed. (Please see note 9)

6 Are there any advertisements that will be removed? Yes

If "Yes", please show their position on the block plan AS PHOTO

7 **Please give details of advertisements**
(Please see note 3)

| | Number | Height | Width | Depth |
|---|---|---|---|---|
| Hoarding | | | | |
| Fascia | 1 | 845mm | 560mm | 135mm |
| Box Sign | 1 | 580mm | 840mm | 125mm |
| Flag | | | | |
| Pole | | | | |

**Other** (please give details)

| Type of Sign | Number | Height | Width | Depth |
|---|---|---|---|---|
| INTERNAL X 2 | 1 | 580 | 580 | 100 |

For **Fascia** signs only, what is the height of the top of the sign above the ground? (metres) 3065mm

How far do the advertisements project from the face of the building? (metres) 135mm

**Please give details of the materials and colour to be used for:**

**The Framework**

Materials: Brushed silver aluminium
Colour:

**The Face of the Board and Any Letters**

Materials: Acrylic/aluminium
Colour: opal/green

**The Bracket**

Materials: Steel
Colour: black

**Lighting and Display**

Will the advertisements have any lighting? Yes

If "Yes", will the lighting be Inside

What type of lighting will it be? Fluorescent TO LOGO ONLY

If advert is internally illuminated, how bright will it be? Less than 200 candelas

**Please tell us the period for which you would like to display the advertisements.**

From 2007 To 2012

8. Please state the fee enclosed (please see note 8) £ 75.00



Signature

Date: 12-04-07

Please print your name: B. PIPER

## Control of Advertisements - Notes

**It is an offence to put up many types of advertisements without consent.**
**We usually take legal action against people who do this.**
**Please do not put up your advertisements until you have consent.**

1. Under the Town and Country Planning (Control of Advertisement) Regulations 1992 (as amended) you need express consent to display many types of advertisements. Please refer to the current regulations for details or ask a planning officer.

2. Planning officers can normally give you help and advice if you show them what you want to do before you hand in your application. Please follow the advice below before you make your application. If what you want to do does not meet the standards set out in the guide, please write to us for advice.

3. Definition of types of advertisements
Hoarding : Usually a large sign containing poster panels which can be placed at the entrance to or sides of building sites or at important sites on the roadside.
Fascia sign: A sign attached to a building, for example, above a shopfront.
Box sign: A type of sign which projects from the surface it is mounted on, for example, at the front of a building.
Flag: Usually a sign in fabric or plastic in the shape of a flag attached to a single flagpole.
Pole sign: A sign attached to a pole or curved to form a pole, for example, on the forecourt of a garage.

4. Consent is normally given for five years but advertisements are allowed to remain beyond the five year period (subject to the power of the Council to require them to be removed if necessary).

5. You must have consent from the owner of the land or anyone else with the right to give consent before you put up the advertisements. It is your responsibility to get this consent.

6. It is your responsibility to get any other necessary permission (for example, planning permission or listed building consent). For more advice, please contact us.

7. You must send us four copies of each of the following plans.
One copy of the plans must be coloured to show the work you are applying for.
A location plan which will allow us to identify the exact location of the land. It should be at a scale of 1:1250 and the site should be outlined in red.
A block plan at a scale of at least 1:500 showing the boundaries of the site (highlighted in red) and the exact position of the advertisements.
Detailed plans of the advertisements at a scale of at least 1:10 showing the layout, wording and colour of the advertisements and the size of the lettering. This plan should also show how you will fix or support the advertisements.
If the sign is to be displayed on a building, your application should include an elevation of the relevant face of the building at a scale of 1:100 or 1:50. The elevation should show the exact position of the advertisements on the building. If you have photos of the building, you can use them instead of elevation plans as long as you draw in the sign clearly on the photo.
If the sign is to be illuminated, details of the means of illumination are required, including the luminance in candelas, and the positioning and appearance of any external light fittings.

8. A list of planning fees is available. For more details about fees, please contact the Planning Section on (01273) 263222.

Ordnance Survey®

# OS Sitemap™

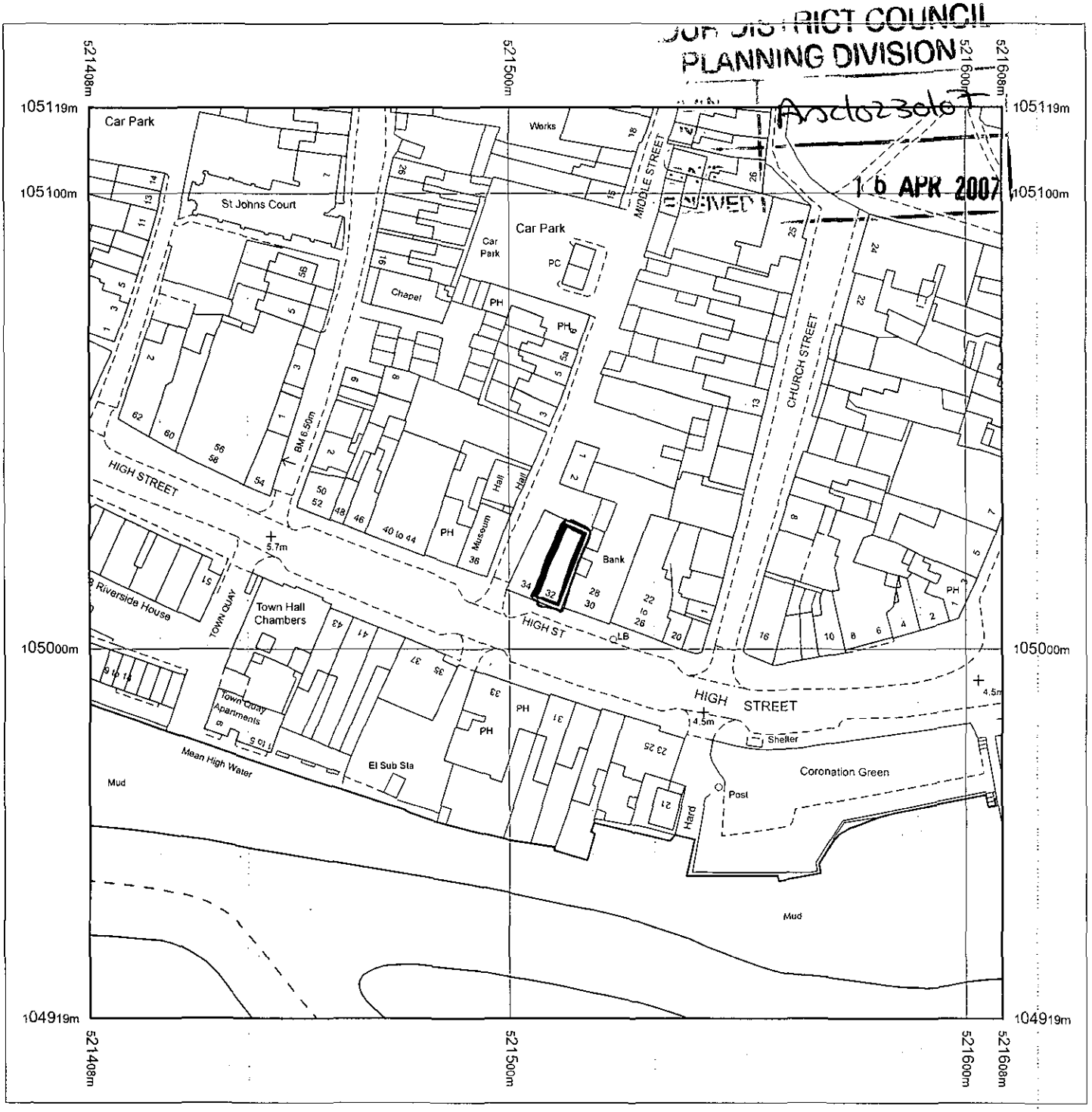


Produced 11.04.2007 from the Ordnance Survey National Geographic Database and incorporating surveyed revision available at this date. © Crown Copyright 2007.

Reproduction in whole or part is prohibited without the prior permission of Ordnance Survey.

Ordnance Survey and the OS Symbol are registered trademarks and OS Sitemap is a trademark of Ordnance Survey, the national mapping agency of Great Britain.

The representation of a road, track or path is no evidence of a right of way.

The representation of features as lines is no evidence of a property boundary.

Metres
0 20 40
Scale 1:1250

Supplied by: **Outlet User**
Serial number: 00212600
Centre coordinates: 521508 105019

Further information can be found on the OS Sitemap Information leaflet or the Ordnance Survey web site: www.ordnancesurvey.co.uk

DISTRICT COUNCIL
PLANNING DIVISION
DATE
RECEIVED
10 APR 2007

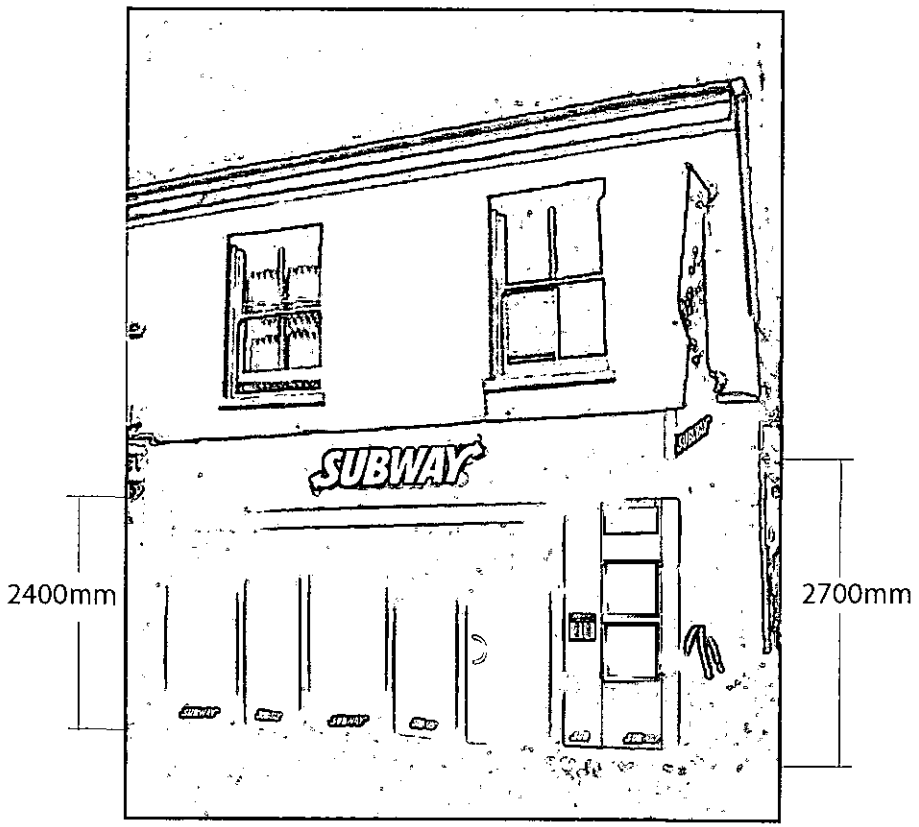


Scale 1:75

| | | | | |
|---|---|---|---|---|
| Client: SUBWAY | Address: 32 High St Shoreham BN4 3DA | Notes: 600 x 3132mm contour sign fixed to a brushed silver reynorbond panel. | Page No: 1<br>DWG No: 1106<br>Revision No: 1<br>Date: | Designer: DLJ<br>Date: 30 -03-07 |

douglas signs & design ltd

Douglass Signs and Designs Limited, 114 Down Street, West Molesey, Surrey, KT8 2TU. Tel: 020 8979 1818 Fax: 020 8979 0348 email: Info@douglas-signsltd.co.uk

DISTRICT COUNCIL
PLANNING DIVISION
Ans 0230/07
DATE
RECEIVED
16 APR 2007

SUBWAY®

scale : 1:25

1no set: 3132 x 600mm Internally illuminated contour sign with 120mm semigloss black returns. Opal 050 'SUB' and yellow 2037 acrylic face illumination only.

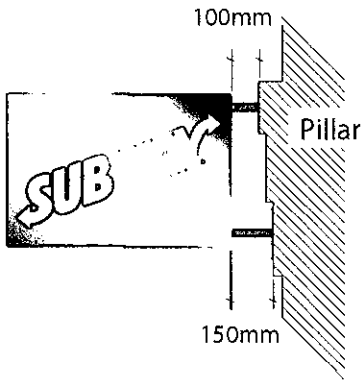




scale : 1:25

800 x 540 x 125mm Internally illuminated double sided projecting sign with 2no extension brackets upper bracket 100mm lower bracket 150mm, aluminium box clad in brushed silver reynorbond with stencil cut letters backed up with acrylic 'SUB' in opal 050 and 'WAY' in yellow 2037.

| | | | | |
|---|---|---|---|---|
| Client: SUBWAY | Address: 32 High St Shoreham BN4 3DA | Notes: | Page No: 2<br>DWG No: 1106<br>Revision No: 1<br>Date: | Designer: DLJ<br>Date: 30-03-07 |

douglas signs & design ltd

Douglass Signs and Designs Limited, 114 Down Street, West Molesey, Surrey, KT8 2TU. Tel: 020 8979 1818 Fax: 020 8979 0348 email: Info@douglas-signsltd.co.uk

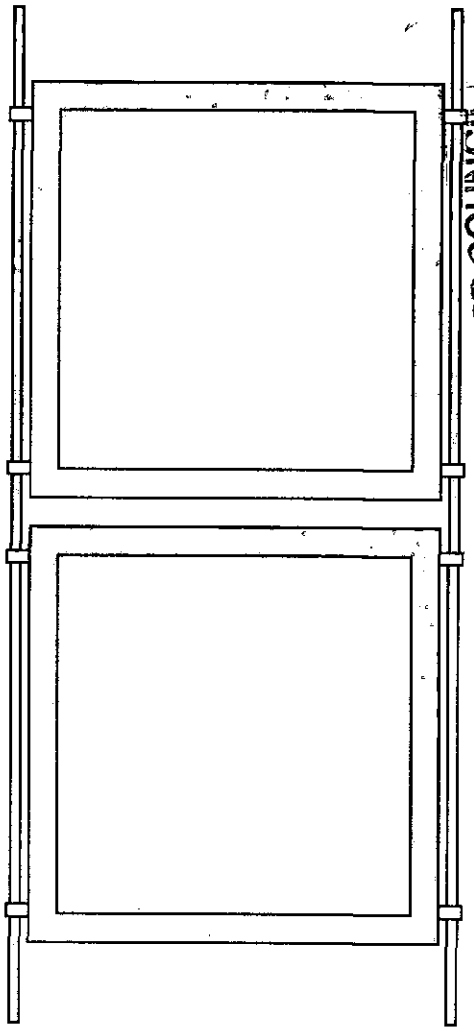

## Menu Cases - *Scale 1:10*

1no set of 2no internally illuminated menu cases painted silver 580x580mm fixed between 2no square silver tubes one of which will have the power cable fed through.

DISTRICT COUNCIL
PLANNING DIVISION
16 APR 2007
DATE RECEIVED




## Opening Hours - *Scale 1:10*

1no opening hours acrylic panel 300x300mm background colour Pantone 554 with logo in applied vinyl 'SUB' & 'OPENING HOURS' in white with 'WAY' in Pantone 109 yellow.
The back and the sides will be painted silver




## Window vinyl graphics - *Scale 1:20*

Vinyl graphics applied to reverse of shop front glass.
'SUB' in white and 'WAY' in Pantone 109 Yellow.
Logo's approx 450mm wide.

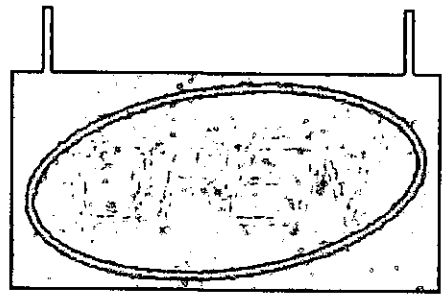

## Window Sign - *Scale 1:10*

1no suspended neon sign 610x305mm.
12mm neon mounted onto smoked grey acrylic box 'OPEN' in clear red with oval outline in green EGL E-10 .
The back and sides will be painted silver

Client: SUBWAY
Address: 32 High St Shoreham BN4 3DA
Notes:
Page No: 3
DWG No: 1106
Revision No: 1
Date:
Designer: DLJ
Date: 30 -03-07

douglas signs & design ltd

Douglass Signs and Designs Limited, 114 Down Street, West Molesey, Surrey, KT8 2TU. Tel: 020 8979 1818 Fax: 020 8979 0348 email: Info@douglas-signsltd.co.uk

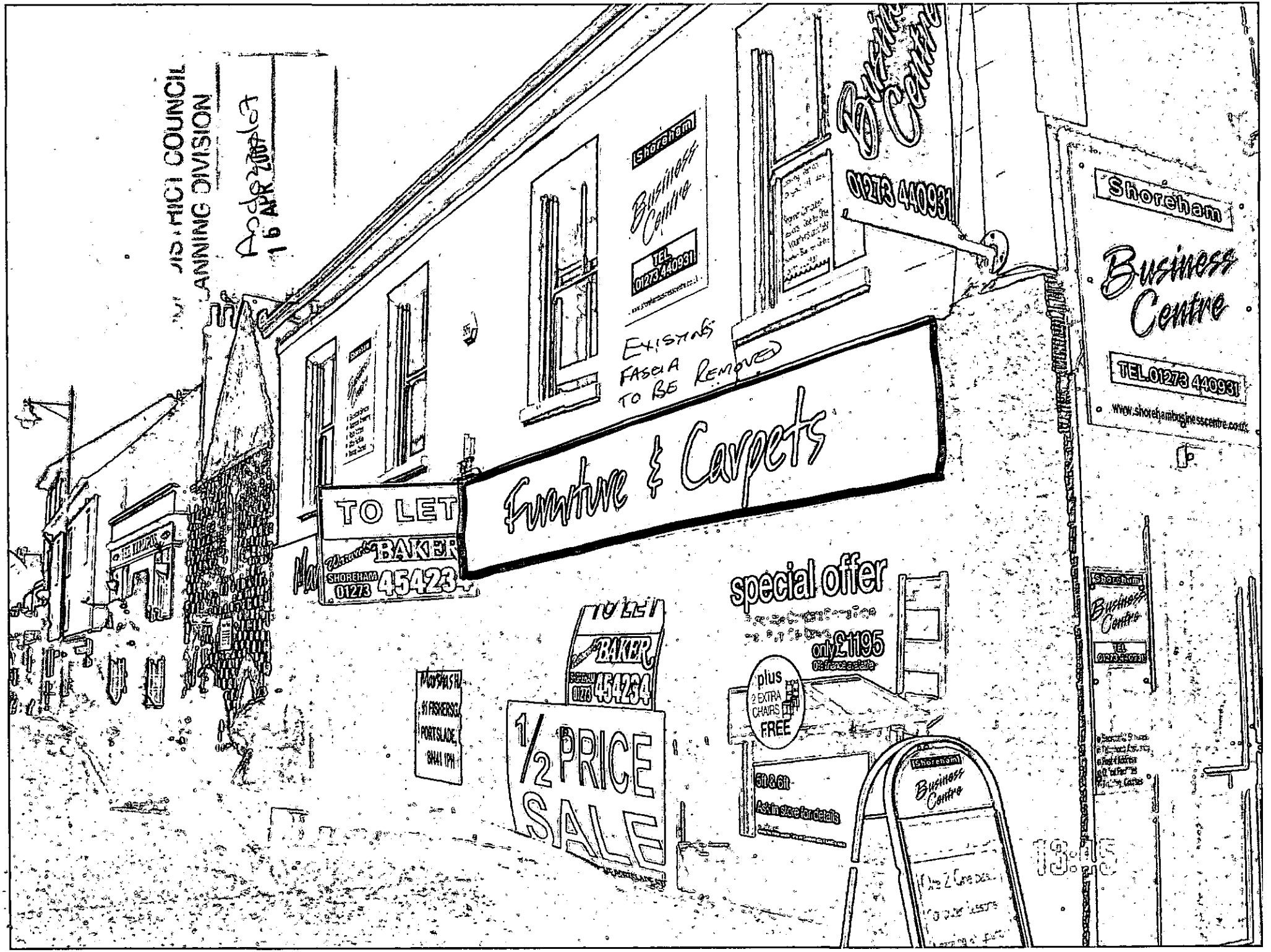
Shoreham
Business Centre
TEL 01273 440931
Existing Fascia to be Removed
Furniture & Carpets
TO LET
BAKER
SHOREHAM 01273 45423
special offer
only £1195
plus 2 EXTRA CHAIRS FREE
1/2 PRICE SALE
Shoreham
Business Centre
TEL.01273 440931
www.shorehambusinesscentre.co.uk