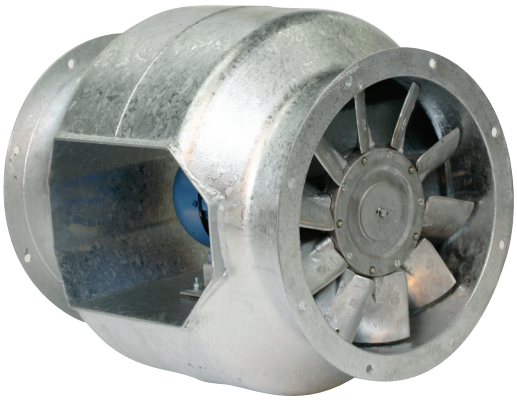

BIFLOW SB CON

Bifurcated Conical Axial Flow Fan

» **Select** models available for next day delivery

BIFLOW SB CON

Product Overview



- 4 standard sizes from 250mm to 500mm
- Air volume flow rates up to 3.803 m³/s
- Static pressures up to 608 Pa
- Suitable for operating temperatures up to +200°C
- Available in **AC**

A range of bifurcated axial fans, specially developed with motor out of the airstream to handle more hostile air movement applications.

High Temperature

Class H motors out of the airstream are not effected by contaminates in the ventilated air. Suitable for elevated temperatures of up to 200°C.

Efficient Performance

High Efficiency Adjustable pitch aerofoil impellers are provided with blades made from high quality pressure die cast aluminium.

Corrosion resistance

The fan casing is dip galvanised after fabrication to BS 729, offering enhanced corrosion resistance.

Weather Resistance

The fans are suitable for external mounting as standard.

Long Life

Motor is isolated from hot and contaminated air, prolonging the life of the fan.

Warranty

Each SB has a 12 month warranty.

Construction

Constructed from sheet steel with both motor and impeller mounted within the length of the unit casing.

Motor

Motors are foot mounted, totally enclosed fan cooled, IP55, with sealed for life bearings with a standard industrial paint finish and Class H insulation to EN 60034-5.

Impeller

Adjustable pitch aerofoil impellers are provided with blades made from high quality pressure die cast aluminium (LM6), natural finish. Impellers are factory set at an angle to provide maximum performance. The hubs are manufactured from die cast aluminium alloy (LM24). Assembled impellers are to be dynamically balanced to ISO 14694 Grade G6.3.

Typical Applications

- Kitchen Extract
- Spray Booths
- Hot Gas Situations
- Corrosive Atmospheres
- Boiler Houses
- Heavy Industrial

Contents

Page	Information
3	Performance Range Curves
4	Performance, SFP & Electrical Data
6	Sound Data
8	Dimensional Data
9	Accessories

Product Coding

Code	Reference
SB	Product Range
250	Diameter (250/315/400...)
/	
4	Number of Poles (2/4/6)
–	
1	Voltage Supply (Single Phase / Three Phase)
AC	Motor Type (AC/EC)
A - Z	Additional Coding (A - Z) Product Variants
e.g.	**SB250 / CON4 - 1AC**

Tel **01384 275800** Fax **01384 275810** Email **info@eltafans.co.uk** Website **eltafans.com**

BIFLOW SB CON

AC

Performance Range Curves

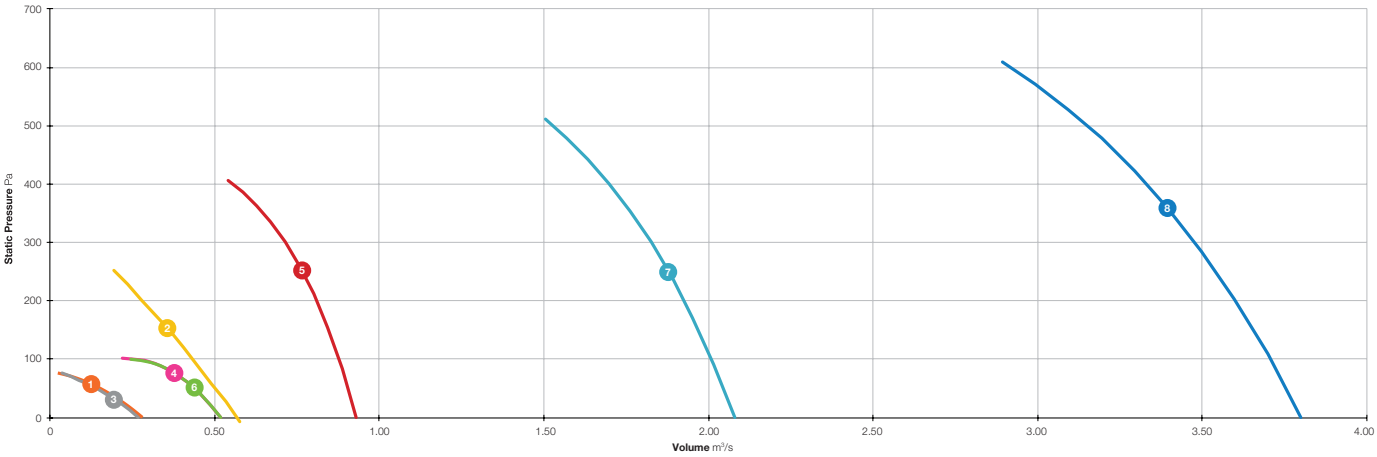

1 SB250 / CON4-1
2 SB250 / CON2-3
3 SB250 / CON4-3
4 SB315 / CON4-1
5 SB315 / CON2-3
6 SB315 / CON4-3
7 SB400 / CON2-3
8 SB500 / CON2-3

Elta Fans Limited has a policy of continuous product development and improvement and therefore reserves the right to supply products which may differ from those illustrated and described in this publication. Confirmation of dimensions and data will be supplied on request.

BIFLOW SB CON

AC

Performance, SFP & Electrical Data

Single Phase 220V to 240V / 50Hz

Product Code	Speed r/min	Airflow SFP	Airflow m³/s @ Static Pressure Pa								At Best Efficiency Point	Electrical Data	dBA @ 3m	
			0	25	50	75	100	150	200	250	Output kW	Peak Amps		
SB250-CON4-1	1450	m³/s	0.280	0.223	0.150	0.029	-	-	-	-	0.120	1.13	Inlet	48
SB315-CON4-1	1370	m³/s	0.521	0.483	0.439	0.383	0.257	-	-	-	0.120	1.13	Inlet	51

Data provided is at standard air density of 1.2 kg/m³.
Exempt from ErP of the European Parliament.
Peak Amps @ 230V / 1PH / 50Hz.
The overall A-weighted sound pressure level is at a distance of 3m with spherical free-field propagation. It is expressed in dB re-20µPa and is presented for comparative purposes only.

BIFLOW SB CON

AC

Performance, SFP & Electrical Data

Three Phase 380V to 415V / 50Hz

Product Code	Speed r/min	Airflow SFP	Airflow m³/s @ Static Pressure Pa												At Best Efficiency Point	Electrical Data		dBA @ 3m	
			0	25	50	75	100	150	200	250	300	350	400	500	Output kW	Peak Amps	Δ / Y		
SB250-CON2-3	2780	m³/s	0.566	0.535	0.502	0.468	0.434	0.360	0.282	0.198	-	-	-	-	0.250	0.68	Mains	Inlet	61
SB250-CON4-3	1370	m³/s	0.270	0.211	0.140	0.040	-	-	-	-	-	-	-	-	0.120	0.48	Mains	Inlet	48
SB315-CON2-3	2780	m³/s	0.931	0.919	0.906	0.892	0.878	0.848	0.810	0.768	0.716	0.648	0.554	-	0.550	1.18	Mains	Inlet	64
SB315-CON4-3	1370	m³/s	0.521	0.483	0.439	0.383	0.257	-	-	-	-	-	-	-	0.120	0.48	Mains	Inlet	51
SB400-CON2-3	2800	m³/s	2.082	2.065	2.047	2.029	2.010	1.969	1.926	1.878	1.825	1.766	1.698	1.527	2.200	4.42	Mains	Inlet	70
SB500-CON2-3	2840	m³/s	3.803	3.780	3.756	3.732	3.707	3.655	3.600	3.541	3.477	3.408	3.332	3.152	4.000	7.49	Mains	Inlet	80

Data provided is at standard air density of 1.2 kg/m³.
Exempt from ErP of the European Parliament.
Peak Amps @ 400V / 3PH / 50Hz.
The overall A-weighted sound pressure level is at a distance of 3m with spherical free-field propagation. It is expressed in dB re-20µPa and is presented for comparative purposes only.

Elta Fans Limited has a policy of continuous product development and improvement and therefore reserves the right to supply products which may differ from those illustrated and described in this publication.
Confirmation of dimensions and data will be supplied on request.

BIFLOW SB CON

AC

Sound Data

Single Phase 220V to 240V / 50Hz

Product Code		Sound Power Level dBW @ Octave Band Hz								Total dB
		63Hz	125Hz	250Hz	500Hz	1kHz	2kHz	4kHz	8kHz	
SB250-CON4-1	Inlet	77	74	71	64	62	60	57	47	80
SB315-CON4-1	Inlet	80	77	74	68	66	64	62	53	83

Data provided at standard air density of 1.2 kg/m³.
Tests and preparation of the sound data have been carried out in accordance with BS 848 Part 2:1985 at 50% peak pressure.
The Sound Power Level Spectra are in dB re-1pW.

Tel **01384 275800** Fax **01384 275810** Email **info@eltafans.co.uk** Website **eltafans.com**

BIFLOW SB CON

AC

Sound Data

Three Phase 380V to 415V / 50Hz

Product Code	Speed r/min		Sound Power Level dBW @ Octave Band Hz								Total dB
			63Hz	125Hz	250Hz	500Hz	1kHz	2kHz	4kHz	8kHz	
SB250-CON2-3	2780	Inlet	83	81	79	78	77	75	73	69	88
SB250-CON4-3	1370	Inlet	77	74	71	64	62	60	57	47	80
SB315-CON2-3	2780	Inlet	90	86	82	81	80	77	77	71	93
SB315-CON4-3	1370	Inlet	80	77	74	68	66	64	62	53	83
SB400-CON2-3	2800	Inlet	94	87	86	90	84	83	80	73	97
SB500-CON2-3	2840	Inlet	98	93	90	96	96	95	93	89	104

Data provided at standard air density of 1.2 kg/m³.
Tests and preparation of the sound data have been carried out in accordance with BS 848 Part 2:1985 at 50% peak pressure.
The Sound Power Level Spectra are in dB re-1pW.

Elta Fans Limited has a policy of continuous product development and improvement and therefore reserves the right to supply products which may differ from those illustrated and described in this publication.
Confirmation of dimensions and data will be supplied on request.

BIFLOW SB CON

Dimensional Data

Single & Three Phase

Product Code	A	B	C	D	E	F	G	H	Weight kg
SB250-CON4-1	250	325	460	220	8	10	299	400	23
SB250-CON2-3	250	325	460	220	8	10	299	400	23
SB250-CON4-3	250	325	460	220	8	10	299	400	23
SB315-CON4-1	315	380	500	250	8	10	355	460	30
SB315-CON2-3	315	380	500	250	8	10	355	460	31
SB315-CON4-3	315	380	500	250	8	10	355	460	30
SB400-CON2-3	400	485	650	305	8	12	450	570	49
SB500-CON2-3	500	585	710	370	12	12	560	700	86

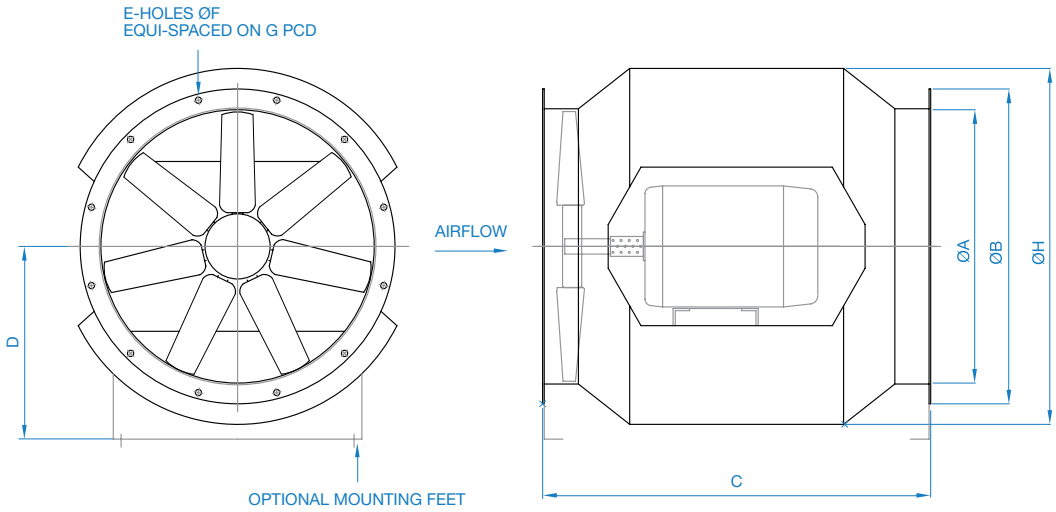

Dimensions are in mm.

Tel **01384 275800** Fax **01384 275810** Email **info@eltafans.co.uk** Website **eltafans.com**

BIFLOW SB CON

AC

Accessories

Single Phase

Product Code	Ancillary Pack*	AV Mounts (set of 4)**	Bell Mouth Inlet	Flanged Damper	Flanged Silencer 1D Podded	Flanged Silencer 1D Unpodded
SB250-CON4-1	APK250SBCON/002	062-002	241B-0250	019-0250-STD	068-0250-1DEP	068-0250-1DENP
SB315-CON4-1	APK315SBCON/003	062-003	241B-0315	019-0315-STD	068-0315-1DEP	068-0315-1DENP

Product Code	Flanged Silencer 2D Podded	Flanged Silencer 2D Unpodded	High Temperature Flexible Connectors (each)	Impeller Side Guard	Matching Flanges (each)	Mounting Feet (each)	Wiring Diagrams
SB250-CON4-1	068-0250-2DEP	068-0250-2DENP	063-0250-PU250	078C-0250-C	061B-0250-B	060B-0250-B	152-521
SB315-CON4-1	068-0315-2DEP	068-0315-2DENP	063-0315-PU250	078C-0315-C	061B-0315	060B-0315-B	152-521

Three Phase

Product Code	Ancillary Pack*	AV Mounts (set of 4)**	Bell Mouth Inlet	Flanged Damper	Flanged Silencer 1D Podded	Flanged Silencer 1D Unpodded
SB250-CON2-3	APK250SBCON/002	062-002	241B-0250	019-0250-STD	068-0250-1DEP	068-0250-1DENP
SB250-CON4-3	APK250SBCON/002	062-002	241B-0250	019-0250-STD	068-0250-1DEP	068-0250-1DENP
SB315-CON2-3	APK315SBCON/003	062-003	241B-0315	019-0315-STD	068-0315-1DEP	068-0315-1DENP
SB315-CON4-3	APK315SBCON/003	062-003	241B-0315	019-0315-STD	068-0315-1DEP	068-0315-1DENP
SB400-CON2-3	APK400SBCON/003	062-003	241B-0400-BELL	019-0400-STD	068-0400-1DEP	068-0400-1DENP
SB500-CON2-3	APK500SBCON/004	062-004	241B-0500-BELL	019-0500-STD	068-0500-1DEP	068-0500-1DENP

Product Code	Flanged Silencer 2D Podded	Flanged Silencer 2D Unpodded	High Temperature Flexible Connectors (each)	Impeller Side Guard	Matching Flanges (each)	Mounting Feet (each)	Wiring Diagram
SB250-CON2-3	068-0250-2DEP	068-0250-2DENP	063-0250-PU250	078C-0250-C	061B-0250-B	060B-0250-B	152-600
SB250-CON4-3	068-0250-2DEP	068-0250-2DENP	063-0250-PU250	078C-0250-C	061B-0250-B	060B-0250-B	152-600
SB315-CON2-3	068-0315-2DEP	068-0315-2DENP	063-0315-PU250	078C-0315-C	061B-0315	060B-0315-B	152-600
SB315-CON4-3	068-0315-2DEP	068-0315-2DENP	063-0315-PU250	078C-0315-C	061B-0315	060B-0315-B	152-600
SB400-CON2-3	068-0400-2DEP	068-0400-2DENP	063-0400-PU250	078C-0400-C	061B-0400	060B-0400-B	152-600
SB500-CON2-3	068-0500-2DEP	068-0500-2DENP	063-0500-PU250	078C-0500-C	061B-0500	060B-0500-B	152-601

* Consists of Flexible Connections, Matching Flanges, AV Mounts and Mounting Feet.
** Supplied as a single mount.

Elta Fans Limited has a policy of continuous product development and improvement and therefore reserves the right to supply products which may differ from those illustrated and described in this publication. Confirmation of dimensions and data will be supplied on request.

AV MOUNTS

Accessories



- Fits directly to mounting feet
- Rubber with steel insert
- Supplied as a single mount
- Typical installation requires 4 or 6 mounts per fan

Product Code	A	B	C	D	E	F	G	Weight kg
062-002	64	50	43	5.5	20	M6	Ø7	0.040
062-003	80	57	45	5	32	M8	12 x 9	0.102
062-004	80	57	45	5	32	M8	12 x 9	0.102

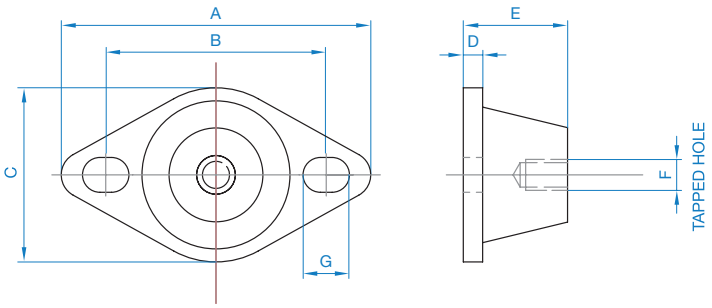

Dimensions are in mm.

Tel **01384 275800** Fax **01384 275810** Email **info@eltafans.co.uk** Website **eltafans.com**

BELL MOUTH INLET

Accessories



- For improved airflow in end of duct applications
- Fixed directly to fan case flange
- Hot dip galvanised steel

Single Phase 220V to 240V / 50Hz or 60Hz

Product Code	Fan Dia. A	B	C	D	E	Weight kg
241B-0250*	250	315	3	50	316	2.0
241B-0315*	315	380	3	58	395	2.5
241B-0400-BELL	400	485	3	75	515	4.5
241B-0500-BELL	500	585	3	93	630	6.2

*Inlet cone

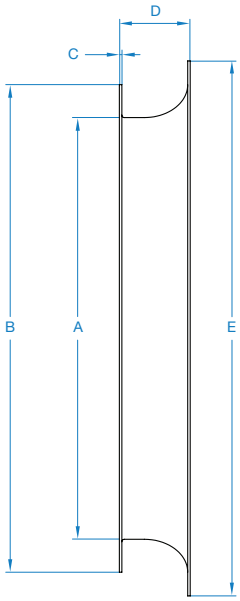

Dimensions are in mm.

Elta Fans Limited has a policy of continuous product development and improvement and therefore reserves the right to supply products which may differ from those illustrated and described in this publication. Confirmation of dimensions and data will be supplied on request.

FLANGED DAMPER

Accessories



- Prevents reverse flow of air when fan is not operating
- Fixed directly to fan case flange
- Hot dip galvanised steel
- Galvanised steel butterfly type blades
- Suitable for horizontal or vertical (upward airflow) mounting

Product Code	Fan Dia. A	B	C	D	E	G	H	J	Weight kg
019-0250-STD	250	306	170	170	1.6	8	10	280	7.0
019-0315-STD	315	375	180	210	2.0	8	10	355	7.5
019-0400-STD	400	475	220	270	3.0	8	12	450	9.0
019-0500-STD	500	585	220	315	3.0	12	12	560	18.0

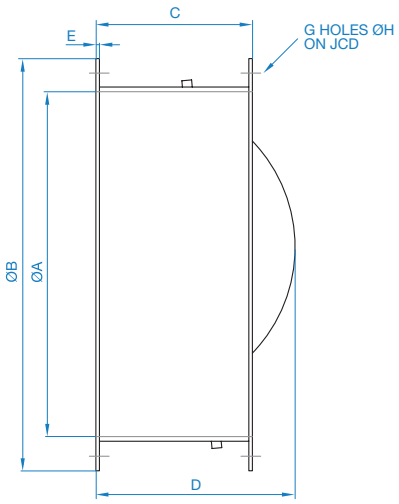

Dimensions are in mm.

Tel **01384 275800** Fax **01384 275810** Email **info@eltafans.co.uk** Website **eltafans.com**

FLANGED SILENCER

Accessories



- Ideal for bolting directly to fan flange
- Ideal for all axial fans
- Ideal for cross talk elimination
- Ideal for flexible or spiral ducting

Overview

Elta Fans are able to provide 2 types of cylindrical silencers as standard; Type DENP (without pod) and DEP (with pod), these are categorised as follows; Compact Silencers (ENP / EP), Standard Silencers (ENP / EP / Melinex).

Construction

Both types are rigidly constructed in galvanised sheet steel, with a highly absorbent sound attenuating lining between the outer casing and the inner perforated steel lining. The end faces of the silencer has a series of threaded holes for direct mounting to the fixing flange/flexible collar. The EP (podded versions) will provide an improved level of attenuation. The inner acoustic pod is constructed from perforated steel sheet with a sound absorbent infill.

Melinex lined silencers must be used to prevent grease impregnation into the acoustic media for kitchen extract applications as prescribed in DW/172 HVAC Specification For Kitchen Ventilation Systems. For Melinex insertion losses, please contact Elta Fans. Silencers can be provided with differing lengths: 1D = 1 times diameter, 2D = 2 times diameter. The Velocity through podded silencer should not exceed 15m/s.

Silencer Attenuation

To determine the sound level of a fan fitted with a silencer, the dynamic insertion loss should be subtracted from the sound power level spectrum (dBW) of the fan. This should be done for the entire octave band mid-frequency spectrum. The fan dBW ratings and silencer attenuation apply equally to in duct applications, with a silencer connected between the fan and the duct system.

Dynamic Insertion Loss

The silencer attenuation is defined as the “dynamic insertion loss”. The values quoted in the tables represent the difference between the sound power level of a fan and silencer combination (dBW) and that of the fan alone (dBW). The dynamic insertion losses shown are the attenuations recorded under ideal working conditions. The achieved attenuation will vary according to the air velocity and flow pattern in the airways. Noise regeneration can occur at higher velocities, especially in EP silencers.

Square / Rectangular Silencers

In highly noise sensitive areas, where the circular silencers cannot achieve the necessary attenuation levels, Elta can design and build optional splitter silencers for greater effect.

Elta Fans Limited has a policy of continuous product development and improvement and therefore reserves the right to supply products which may differ from those illustrated and described in this publication. Confirmation of dimensions and data will be supplied on request.

FLANGED SILENCER

Dynamic Insertion Loss & Pressure Graphs

Dynamic Insertion Loss

Fan Size	Silencer Length	Silencer Type	Insertion Loss @ Octave Band (Hz)							
			63	125	250	500	1k	2k	4k	8k
0250	1D	ENP	-2	-5	-6	-9	-13	-11	-6	-6
		EP	-4	-6	-8	-11	-14	-16	-11	-10
	2D	ENP	-4	-7	-10	-15	-19	-16	-12	-9
		EP	-7	-10	-15	-16	-15	-17	-13	-13
0315-0560	1D	ENP	-2	-5	-6	-9	-13	-11	-6	-6
		EP	-4	-6	-8	-11	-18	-19	-17	-14
	2D	ENP	-4	-8	-12	-17	-23	-17	-12	-10
		EP	-7	-10	-12	-21	-26	-26	-24	-22

Podded Silencers Pressure Graphs

EP-1D

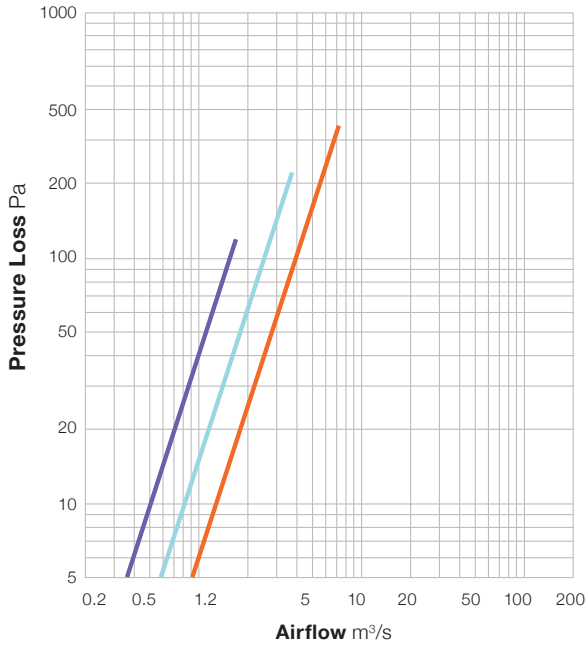

EP-2D

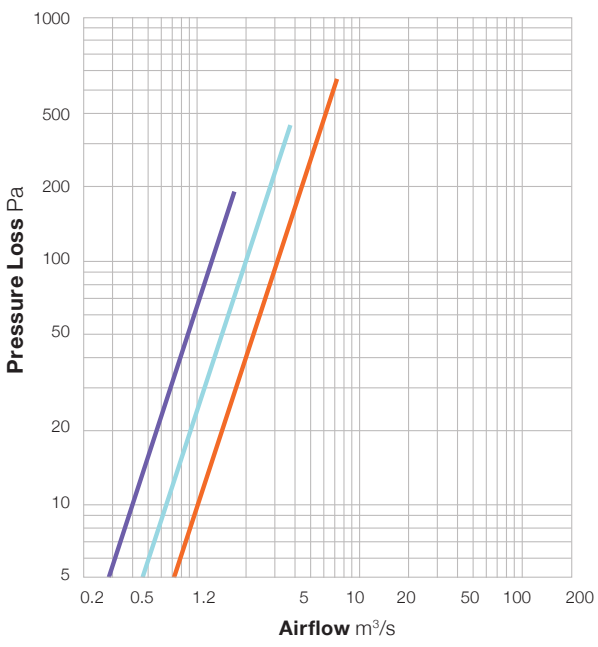

Sizes

- 315
- 400
- 500

For Ø250 podded pressure losses, please contact Elta Fans.

Tel **01384 275800** Fax **01384 275810** Email **info@eltafans.co.uk** Website **eltafans.com**

FLANGED SILENCER

Dimensional Data

Silencer 1DEP Podded

Product Code	Fan Dia	A	B	C	D	E	Weight kg
068-0250-1DEP	250	250	350	8	M8	299	9
068-0315-1DEP	315	315	416	8	M8	355	11
068-0400-1DEP	400	400	503	8	M10	450	16
068-0500-1DEP	500	500	657	12	M10	560	22

Silencer 1DENP Unpodded

Product Code	Fan Dia	A	B	C	D	E	Weight kg
068-0250-1DENP	250	250	350	8	M8	299	7
068-0315-1DENP	315	315	416	8	M8	355	9
068-0400-1DENP	400	400	503	8	M10	450	13
068-0500-1DENP	500	500	657	12	M10	560	18

Silencer 2DEP Podded

Product Code	Fan Dia	A	B	C	D	E	Weight kg
068-0250-2DEP	250	500	350	8	M8	299	13
068-0315-2DEP	315	630	416	8	M8	355	17
068-0400-2DEP	400	800	503	8	M10	450	26
068-0500-2DEP	500	1000	657	12	M10	560	37

Silencer 2DENP Unpodded

Product Code	Fan Dia	A	B	C	D	E	Weight kg
068-0250-2DENP	250	500	350	8	M8	299	11
068-0315-2DENP	315	630	416	8	M8	355	15
068-0400-2DENP	400	800	503	8	M10	450	22
068-0500-2DENP	500	1000	657	12	M10	560	32

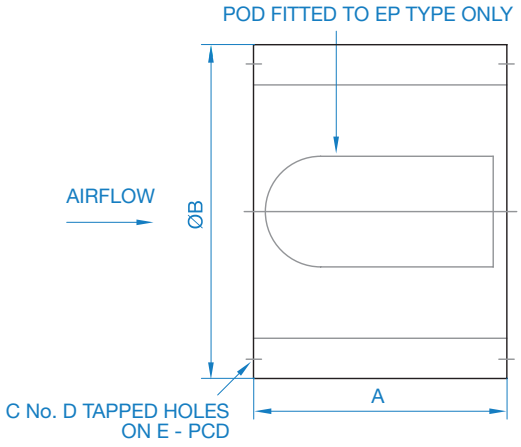

Dimensions are in mm.

Elta Fans Limited has a policy of continuous product development and improvement and therefore reserves the right to supply products which may differ from those illustrated and described in this publication. Confirmation of dimensions and data will be supplied on request.

HIGH TEMPERATURE FLEXIBLE CONNECTOR

Accessories



- Fit to matching flanges to provide flexible connection
- Polyurethane coated glass fiber fabric
- Supplied with plated steel band fixings
- Alternative materials available to order
- Suitable for -50°C and +200°C and up to 400°C / 2 hours

Product Code	Fan Dia. A	B	Weight kg
063-0250-PU250	250	150	0.5
063-0315-PU250	315	150	0.6
063-0400-PU250	400	150	0.9
063-0500-PU250	500	150	1.2

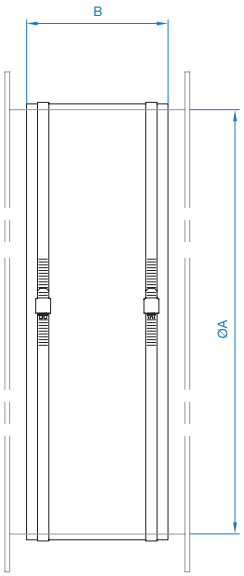

Dimensions are in mm.

Tel **01384 275800** Fax **01384 275810** Email **info@eltafans.co.uk** Website **eltafans.com**

IMPELLER SIDE GUARD

Accessories

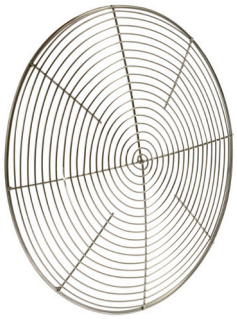

- Powder coated polyester epoxy paint finish in RAL 7040 (Window Grey)
- Fix with clips & screw provided

Product Code	Fan Dia.	A	B	Weight kg
078C-0250-C	250	270	18	0.9
078C-0315-C	315	335	21	1.1
078C-0400-C	400	420	26	1.6
078C-0500-C	500	520	32	2.2

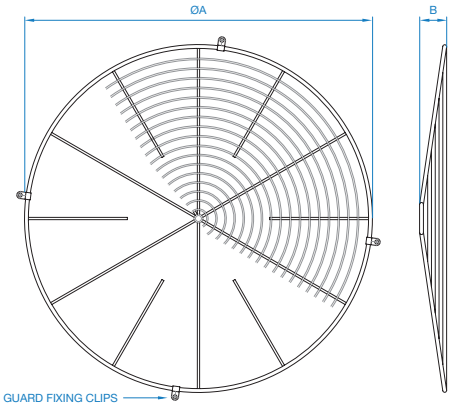

Dimensions are in mm.

Elta Fans Limited has a policy of continuous product development and improvement and therefore reserves the right to supply products which may differ from those illustrated and described in this publication. Confirmation of dimensions and data will be supplied on request.

MATCHING FLANGES

Accessories



- Fits directly to fan case flange
- Provides easy connection to flexible connector or ducting
- Hot dip galvanised steel

Product Code	Fan Dia. A	B	C	D	E	F	G	Weight kg
061B-0250-B	250	325	30	1.5	8	10	229	0.5
061B-0315	315	375	30	1.5	8	10	355	0.7
061B-0400	400	475	40	1.5	8	12	450	1.2
061B-0500	500	585	45	2.0	12	12	560	2.6

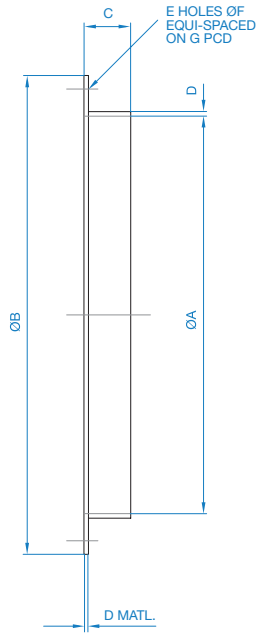

Dimensions are in mm.

MOUNTING FEET

Accessories



- For free standing mounting of ducted fans
- Fixes directly to fan case flange
- Hot dip galvanised steel

Product Code	Fan Dia.	A	B	C	D	E	F	G	H	Weight kg
060B-0250-B	250	220	206	256	-	40	23	3	9	1.0
060B-0315-B	315	250	265	315	-	40	23	3	9	1.5
060B-0400-B	400	305	350	400	-	50	27.5	4	9	2.0
060B-0500-B	500	370	450	500	-	50	27	4	11	3.0

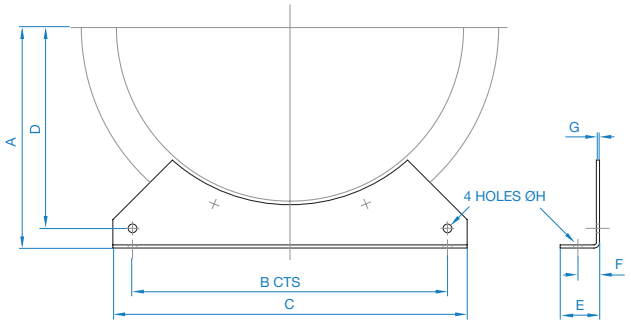

Dimensions are in mm.

Elta Fans Limited has a policy of continuous product development and improvement and therefore reserves the right to supply products which may differ from those illustrated and described in this publication. Confirmation of dimensions and data will be supplied on request.

Building Services

Tel **+44 (0) 1384 275800**
Fax **+44 (0) 1384 275810**
Email **info@eltafans.co.uk**

46 Third Avenue, Pensnett Trading Estate, Kingswinford,
West Midlands, DY6 7US United Kingdom

Applied Technology & Building Services Export

Tel **+44 (0) 1489 566500**
Fax **+44 (0) 1489 566555**
Email **at@eltafans.co.uk** / **export@eltafans.co.uk**

17 Barnes Wallis Road, Segensworth East Industrial Estate,
Fareham, Hampshire, PO15 5ST United Kingdom

eltafans.com

SBCON-10-2021 Issue B

BS EN ISO 9001:2015 FM 556465

A member of HEVAC ASSOCIATION

CIBSE PATRONS

A MEMBER OF ELTA GROUP