© Crown Copyright 2007
Reproduction in whole or in part is prohibited
without the prior permission of Ordnance Survey.

Metres
50 0 50 40 60 80 100


TQ 2754
TQ 2854
TQ 22
TQ 28
30
TQ 2653
TQ 2753
Hawberry Avenue
Hatton Court
Bm 7.82m
Bm 7.98m
Bm 7.25m
Homefield
Homefield Road
Hatton Court
(Unisex) Homes
St John Ambulance Brigade HQ
St John Ambulance Brigade HQ
Electricity Sub Sta
Electricity Sub Sta
Electricity Sub Sta



PARTNERSHIP

CLIENT

HSBC BANK PLC

PROJECT

HSBC OXFORD CIRCUS REFIT
195' OXFORD STREET
MIDTHT - LONDON

DRAWING

SCALE 1:200 @ A3 1:100 @ A1

DATE 10.10.11

DRAWING NO. 07 059 SK103 ()

BY CHECKED

BY DRAWN MLG

AGG PARTNERSHIP (LONDON) LTD

THE FLIX BUILDING, 5 - 4 HOXTON SQUARE, LONDON N1 6NU

REVISION DRN DATE

Stage 5 For construction

HSBC OXFORD CIRCUS

BOROUGH OF WORTHING

DEPOSITED 25/8/08

TP REF NO

WB 1 08108555

T.P. OFFICE COPY

© THIS DRAWING IS COPYRIGHT.
THE ARCHITECT BEFORE PROCEEDING DISCREPANCIES MUST BE REPORTED TO DIMENSIONS ARE TO BE WORKED FROM DIMENSIONS ON SITE. ONLY FIGURED CONTRACTORS MUST CHECK ALL

T.P. OFFICE COPY

CONTRACTORS MUST CHECK ALL DIMENSIONS ON SITE. ONLY FIGURED DIMENSIONS ARE TO BE WORKED FROM. DISCREPANCIES MUST BE REPORTED TO THE ARCHITECT BEFORE PROCEEDING
© THIS DRAWING IS COPYRIGHT.

BOROUGH OF WORTHING
DEPOSITED 22/8/08
TP REF NO
WB / 0810822/MM

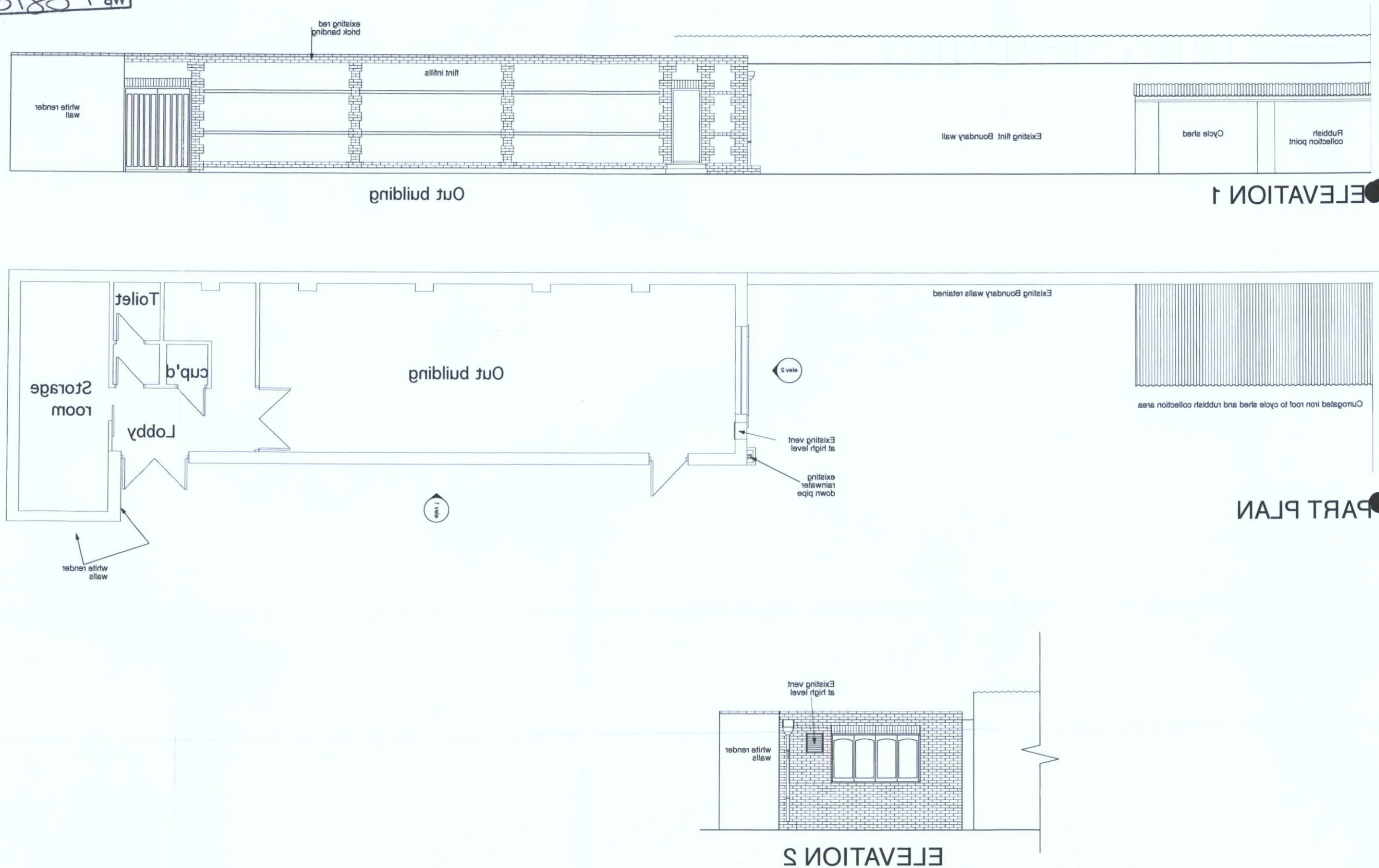

ELEVATION 1

PART PLAN

ELEVATION 2

Worthing Griffin House
Stage 4

REVISION	DR'N	DATE

A&Q PARTNERSHIP

CLIENT
HSBC BANK PLC

PROJECT
Griffin House
21 Farncombe Road
Worthing
West sussex BN11 2BW

DRAWING
EXISTING ELEVATION /PLAN
OUT BUILDING AND CYCLE SHED

SCALE 1:50 @ A3 **DATE** 21.07.08

DRAWING No. 07 059 SK104 () **DRAWN BY** MJG **CHECKED BY**

A&Q PARTNERSHIP (LONDON) LTD
THE LUX BUILDING, 2 - 4 HOXTON SQUARE, LONDON N1 6NU
t: 0207 613 2244 f: 0207 613 2642 e: london@aqp.co.uk



SUBJECT TO CONDITIONS
CONSENT GRANTED
13 OCT 2008
WORTHING BOROUGH COUNCIL

BOROUGH OF WORTHING
DEPOSITED 25/8/08
TP REFINO
WB 10810855

HSBC OXFORD CIRCUS
Stage 5 For construction

REVISION	DRN	DATE

PARTNERSHIP

CLIENT
HSBC BANK PLC

PROJECT
HSBC OXFORD CIRCUS REFIT
195' OXFORD STREET
WIDTHT - LONDON

DRAWING
CYCLE SHED AND NEW CONDENSER SHOWING OUT BUILDING AND PROPOSED SITE

SCALE 1:200 @ A3 1:100 @ A1
DATE 10.10.07
DRAWING NO. 07 059 SK105 ()
BY CHECKED
BY DRAWN MLG

AGO PARTNERSHIP (LONDON) LTD
THE FIX BUILDING, 5 - 4 HOXTON SQUARE, LONDON N1 6NU
T: 0501 813 5544 F: 0501 813 5845 E: [illegible]

© THIS DRAWING IS COPYRIGHT.
THE ARCHITECT BEFORE PROCEEDING DISCREPANCIES MUST BE REPORTED TO DIMENSIONS ARE TO BE WORKED FROM DIMENSIONS ON SITE. ONLY FIGURED CONTRACTORS MUST CHECK ALL

T.P. OFFICE COPY

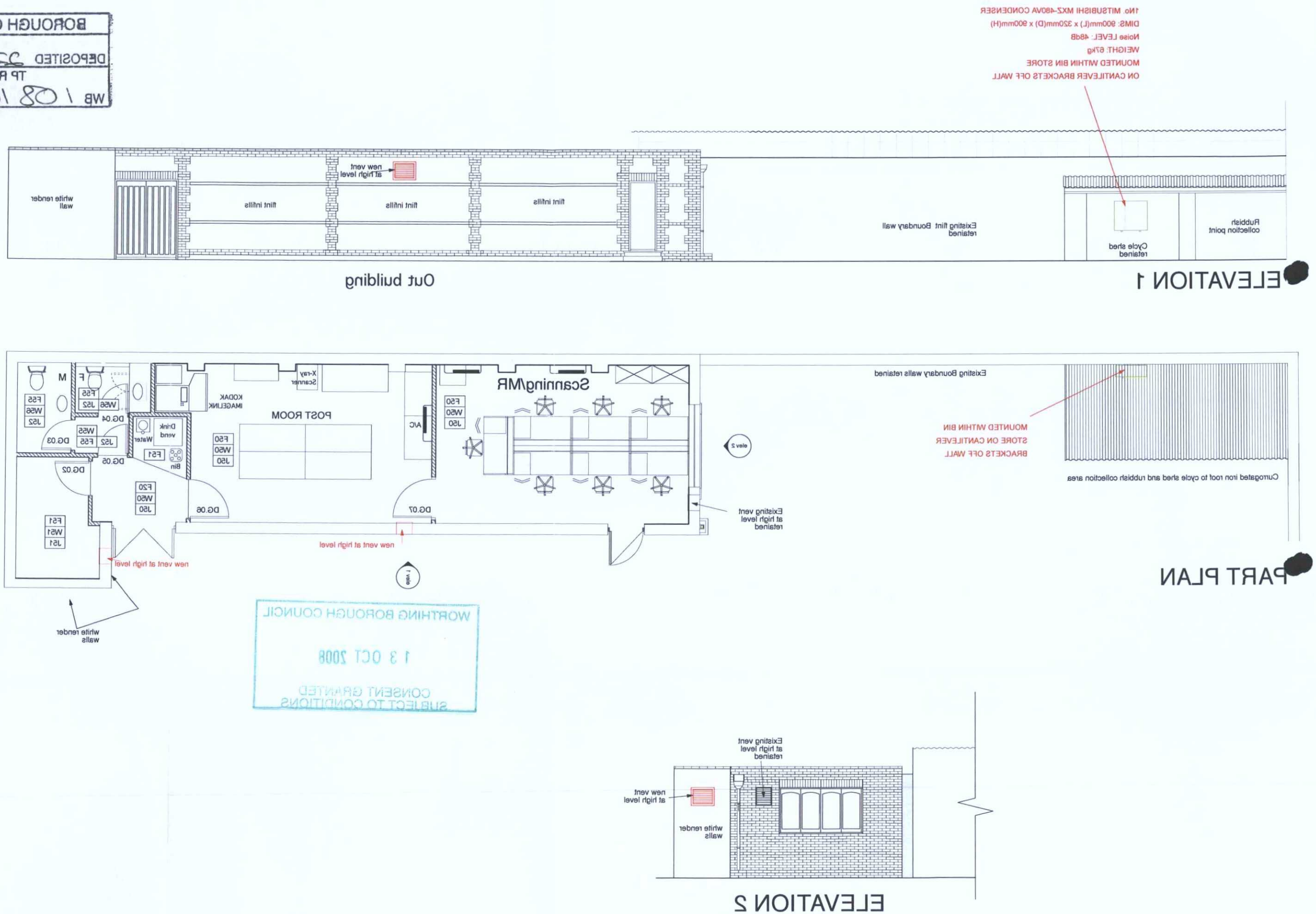

T.P. OFFICE COPY
CONTRACTORS MUST CHE
DIMENSIONS ON SITE. ONLY
DIMENSIONS ARE TO BE WORK
DISCREPANCIES MUST BE REPO
THE ARCHITECT BEFORE PROCEE
© THIS DRAWING IS COPYRIGHT.
BOROUGH OF WORTHING
DEPOSITED 22/8/08
TP REF NO
WB 1 08 1082 Jun
WORTHING BOROUGH COUNCIL
13 OCT 2008
CONSENT GRANTED
SUBJECT TO CONDITIONS

Worthing Griffin House
Stage 4

REVISION	DR'N	DATE

A&Q PARTNERSHIP

CLIENT
HSBC BANK PLC

PROJECT
Griffin House
21 Farncombe Road
Worthing
West sussex BN11 2BW

DRAWING
PROPOSED ELEVATION /PLAN
OUT BUILDING AND CYCLE SHED

SCALE 1:50 @ A3 **DATE** 21.07.08

DRAWING No. 07 059 SK106 () **DRAWN BY** MJG **CHECKED BY**

A&Q PARTNERSHIP (LONDON) LTD
THE LUX BUILDING, 2 - 4 HOXTON SQUARE, LONDON N1 6NU
T: 0207 613 2244 F: 0207 613 2642 e: london@aqp.co.uk

T.P. OFFICE COPY

MXZ-A-VA Inverter Heat Pump (5.2 - 10.0kW)

Multi-Split Units







The multi-split system allows up to five M Series or Mr Slim wall mounted, cassette, ducted, floor or ceiling mounted indoor unit heat-pumps of different capacities to be operated from a single outdoor unit. This makes it an economic answer in multi-room applications, whilst also offering space saving benefits.

- Up to five indoor units may be connected to a single outdoor unit
- Energy saving inverter controlled outdoor unit adjusts compressor performance to economically match the demand for heating and cooling
- Units may be added within the capacity of the system as requirements change
- Single outdoor unit for minimal noise and space impact
- Capacities of indoor units may be mixed to suit individual rooms

Technical Information

MULTI-SPLIT - INDOOR UNITS

MODEL REFERENCE	WALL MOUNTED	FLOOR MOUNTED	DUCTED	CEILING CASSETTE	CEILING SUSPENDED
MXZ-2AS2VA	MSZ-GC22/25/35VA MSZ-FD25/35VA	MFZ-KA25/35VA	SEZ-KD25/35VA	SLZ-KA25/35VA	
MXZ-3AS4VA	MSZ-GC22/25/35VA MSZ-GB50VA MSZ-FD25/35VA	MFZ-KA25/35/50VA	SEZ-KD25/35/50VA PEAD-RP50EA	SLZ-KA25/35/50VA PLA-RP50BA	PCA-RP50GA2
MXZ-4AT1VA	MSZ-GC22/25/35VA MSZ-GB50VA MSZ-GA60VA MSZ-FD25/35VA	MFZ-KA25/35/50VA	SEZ-KD25/35/50/60VA PEAD-RP50EA	SLZ-KA25/35/50VA PLA-RP50/60BA	PCA-RP50/60CA(2)
MXZ-4A80VA	MSZ-GC22/25/35VA MSZ-GB50VA MSZ-GA60/71VA MSZ-FD25/35VA	MFZ-KA25/35/50VA	SEZ-KD25/35/50/60/71VA PEAD-RP50EA	SLZ-KA25/35/50VA PLA-RP50/60/71BA	PCA-RP50/60/71GA(2)
MXZ-5A100VA	MSZ-GC22/25/35VA MSZ-GB50VA MSZ-GA60/71VA MSZ-FD25/35VA	MFZ-KA25/35/50VA	SEZ-KD25/35/50/60/71VA PEAD-RP50EA	SLZ-KA25/35/50VA PLA-RP50/60/71BA	PCA-RP50/60/71GA(2)

MXZ-A-VA - OUTDOOR UNITS

MODEL REFERENCE		MXZ-2AS2VA	MXZ-3AS4VA	MXZ-4AT1VA	MXZ-4A80VA	MXZ-5A100VA
NUMBER OF CONNECTABLE INDOOR UNITS		2	2 - 3	2 - 4	2 - 4	2 - 5
CAPACITY (kW)	Heating (nominal)	6.4 (1.0-7.2)	6.8 (2.6-9.0)	8.6 (3.4-9.0)	9.4 (3.4-11.6)	12.0 (3.4-14.0)
	Cooling (nominal)	5.2 (1.1-6.0)	5.4 (2.9-6.8)	7.1 (3.7-7.8)	8.0 (3.7-9.2)	10.0 (3.7-11.0)
	Heating (UK)	5.3 (0.85-6.0)	5.65 (2.15-7.5)	7.15 (2.85-7.5)	7.8 (2.85-9.65)	9.95 (2.85-11.65)
	Cooling (UK)	5.15 (1.1-5.95)	5.35 (2.9-6.75)	7.05 (2.65-8.75)	7.95 (3.65-9.15)	9.9 (3.65-10.9)
COP \ EER (nominal)		3.75 \ 3.46	4.67 \ 4.17	4.41 \ 3.68	4.87 \ 3.65	4.23 \ 3.41
ENERGY LABEL	Heating\Cooling	A \ A	A \ A	A \ A	A \ A	A \ A
MAX AIRFLOW (m3/min)	Heating\Cooling	31 \ 31	41.1 \ 41.1	46.5 \ 42.1	43.8 \ 42.2	59.3 \ 56.6
NOISE (dBA)	Heating\Cooling - Lo-Hi	48-50 \ 45-49	47-48 \ 44-46	48-50 \ 45-48	46-48 \ 44-46	46-54 \ 45-51
DIMENSIONS (mm)	Width	800	840	840	900	900
	Depth	285	330	330	320	320
	Height	550	710	710	900	900
WEIGHT (kg)		40	57	58	67	68
ELECTRICAL SUPPLY		220-240v, 50Hz	220-240v, 50Hz	220-240v, 50Hz	220-240v, 50Hz	220-240v, 50Hz
POWER INPUT (kW)	Heating\Cooling (nominal)	1.705 \ 1.505	1.455 \ 1.295	1.95 \ 1.93	1.93 \ 2.19	2.85 \ 2.95
	Heating\Cooling (UK)	1.55 \ 1.2	1.32 \ 1.04	1.77 \ 1.54	1.76 \ 1.75	2.58 \ 2.35
STARTING CURRENT (A)		7.64	6.39	8.56	9.62	12.88
RUNNING CURRENT (A) (MAX)	Heating\Cooling	7.64 \ 6.75 [10.2]	6.39 \ 6.39 [16.4]	8.56 \ 8.48 [16.4]	8.48 \ 9.62 [17.4]	12.45 \ 12.88 [19.4]
INTERCONNECTING CABLE No CORES		4 Core	4 Core	4 Core	4 Core	4 Core
TOTAL PIPE LENGTH (m)		30	50	60	70	80
MAX PIPE LENGTH PER INDOOR UNIT (m)		20	25	25	25	25
MAX HEIGHT DIFFERENCE (m)		15 (10 if Outdoor higher than Indoor)	15 (10 if Outdoor higher than Indoor)	15 (10 if Outdoor higher than Indoor)	15 (10 if Outdoor higher than Indoor)	15 (10 if Outdoor higher than Indoor)
CHARGE R410A (kg) - 40m (20m for MXZ-2AS2VA)		1.3	2.7	2.7	3.5	4.0
FUSE RATING (BS88) – HRC (A)		16	25	25	25	25

Dimensions

OUTDOOR UNIT MXZ-2AS2VA

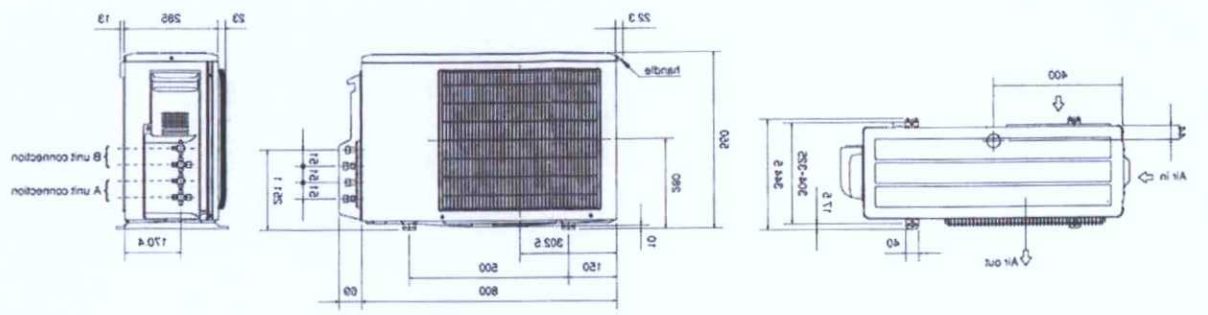

OUTDOOR UNIT MXZ-3AS4VA \ MXZ-4AT1VA

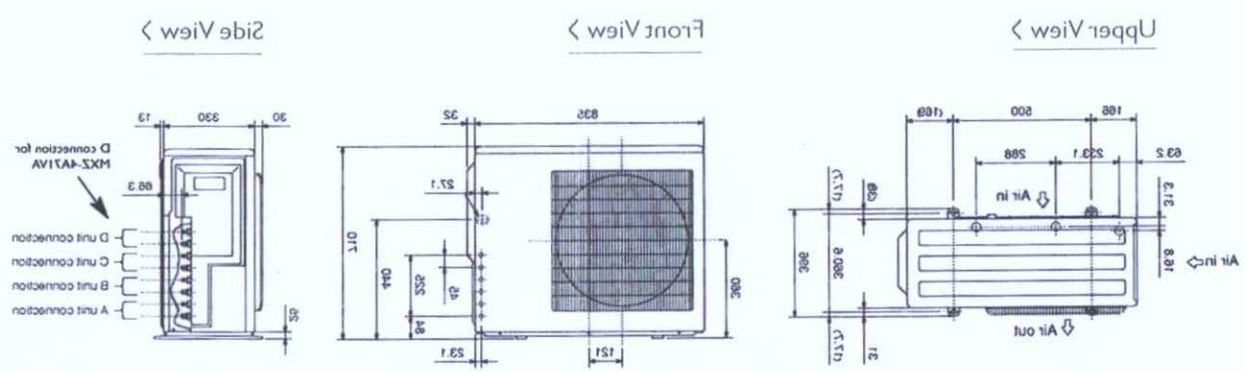

* OUTDOOR UNIT MXZ-4A80VA \ MXZ-5A100VA

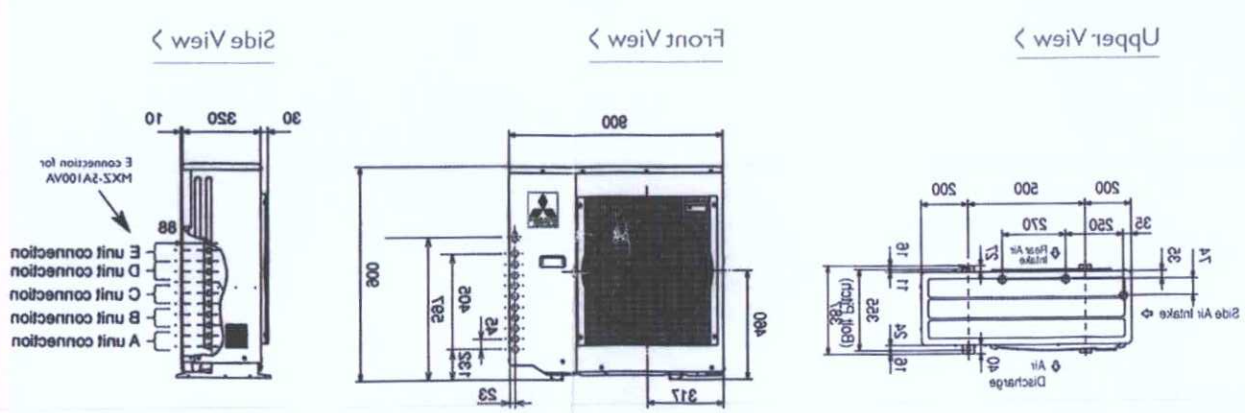

BOROUGH OF WORTHING
DEPOSITED 23/8/08
TP REF NO
WB / 08 / 0822/FUL