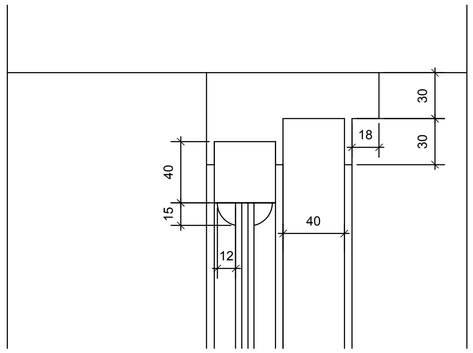

EXISTING HEAD SECTION

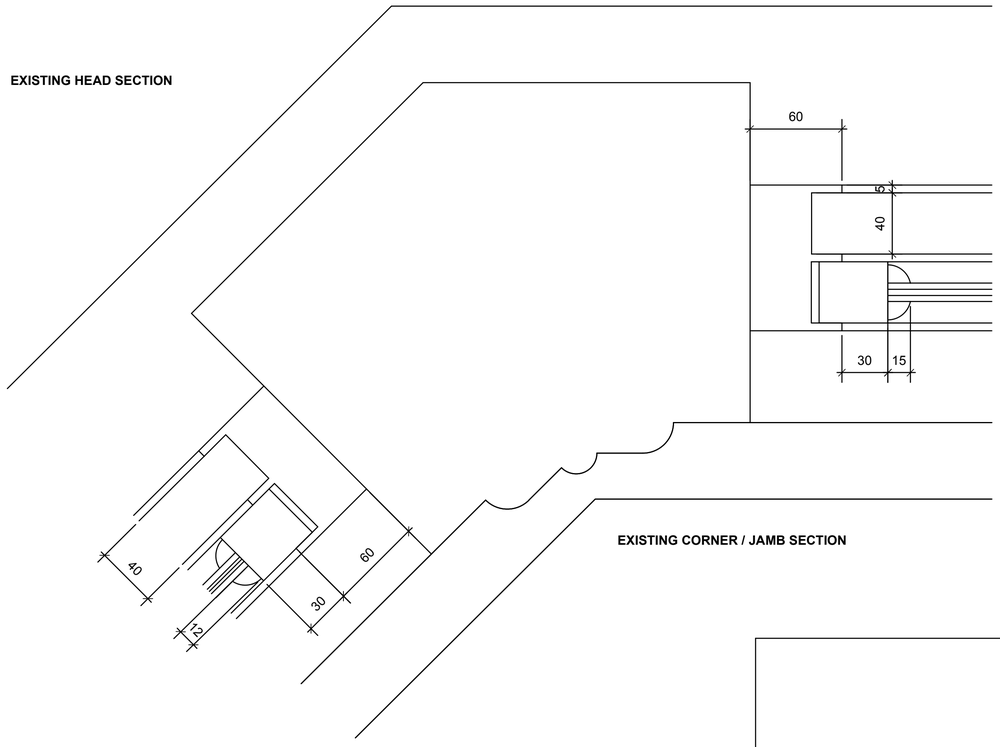

EXISTING CORNER / JAMB SECTION

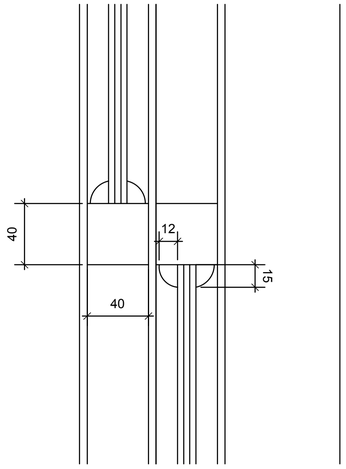

EXISTING MULLION SECTION

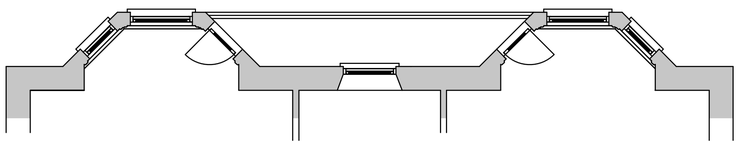

FIRST FLOOR PLAN

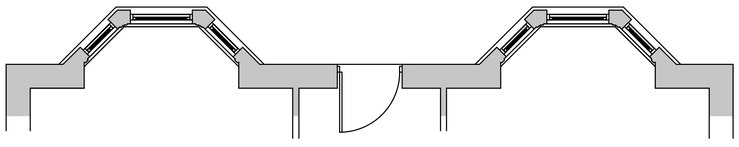

GROUND FLOOR PLAN

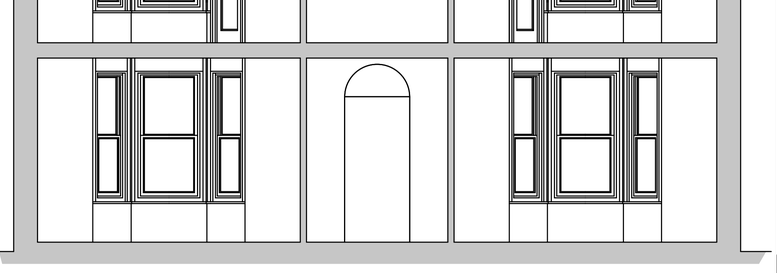

FRONT ELEVATION OF PROPERTY

EXISTING CILL SECTION

INTERNAL ELEVATION OF PROPERTY AND SECTION

0 50 100 150 200
SCALE 1:2

0 50 100
SCALE 1:2

0 1m 2m 3m 4m 5m
SCALE 1:50

NOTES -
ALL EXISTING WINDOWS TO FRONT ELEVATION ARE UPVC AND ARE TO BE REPLACED WITH UPVC LIKE FOR LIKE IN TERMS OF STYLE AND SECTIONS, AS CLOSE AS POSSIBLE.
THERE WILL BE NO CHANGE TO ANY OPENING MECHANISIMS AND THE COLOUR WILL BE WHITE TO MATCH THE EXISTING.

notes:

amendments:

Felce & Guy Partnership LLP
Architects
Studio 5 | English Close | Hove | BN3 7ET
T: 01273 736217 E: info@felceandguy.co.uk

project:	WINDOW REPLACEMENT TO FRONT ELEVATION
location:	110 MARINE PARADE WORTHING
client:	MRS G. WALPOLE
drawing:	EXISTING DETAILS, ELEVATIONS AND PLANS OF EXISTING AND PROPOSED
scale:	1:50 & 1:2
page:	A1
drawn by:	SM
checked by:	
date:	Feb. 2025
drawing number:	2835 - 01
revision:	

© Felce & Guy Partnership LLP