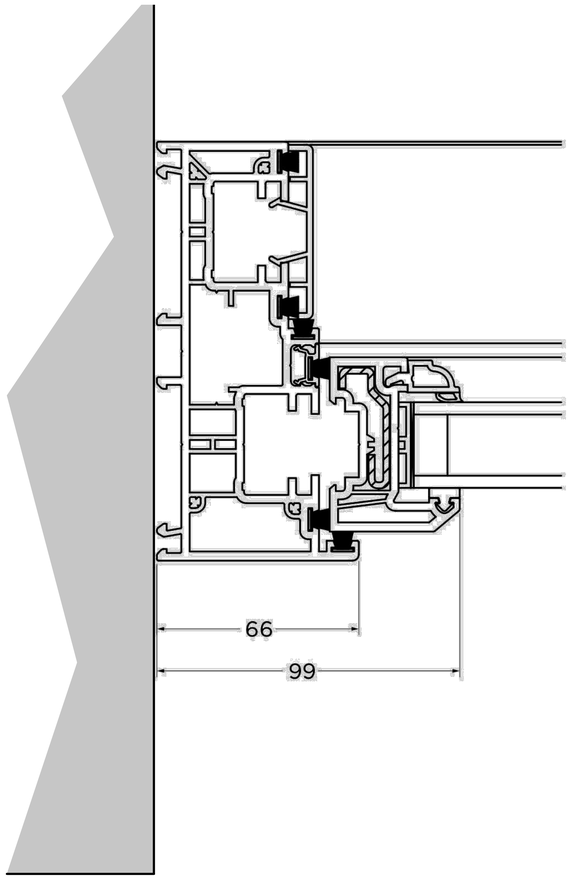

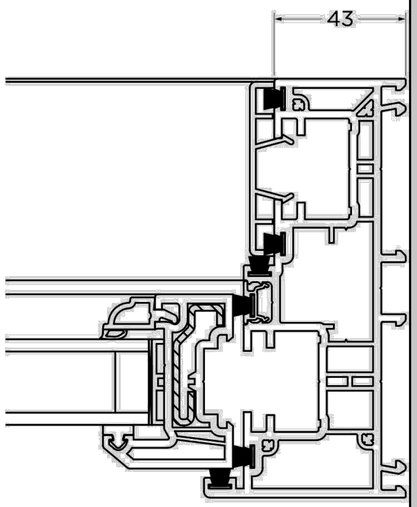

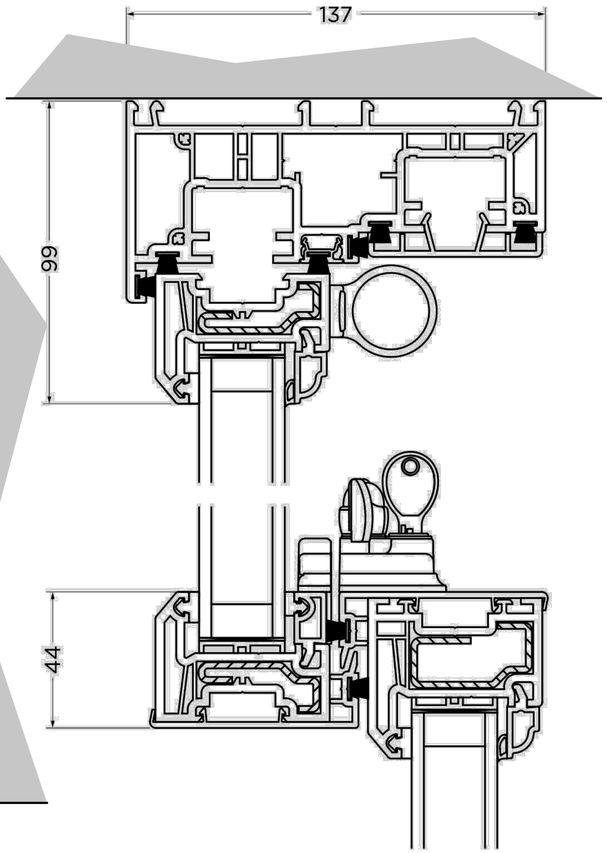

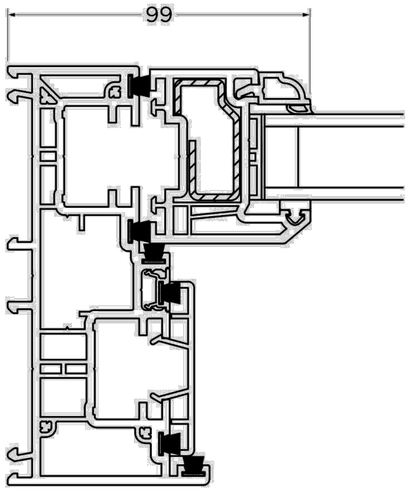

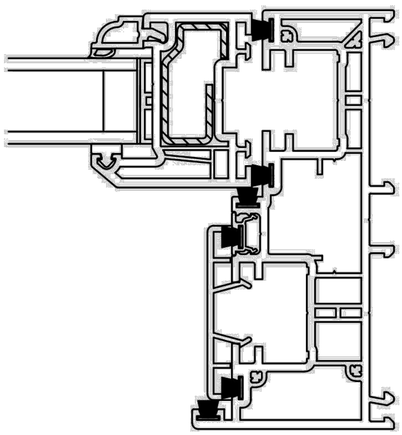

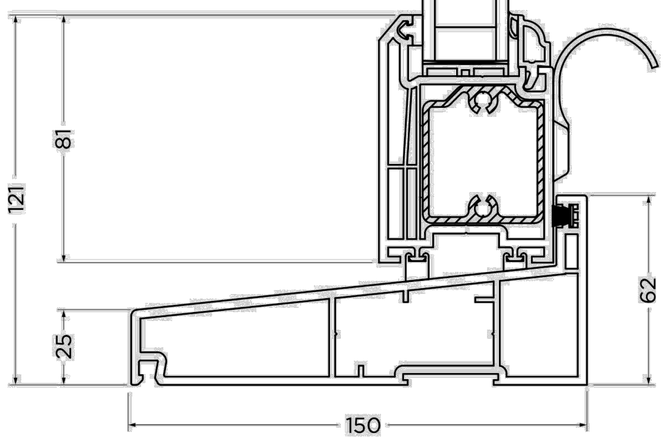

Roseview windows

Rose collection

SCALE 1:2

v1.0 February 2020

©2020 Roseview Windows

notes:

amendments:

Felce & Guy Partnership LLP
Architects

Studio 5 | English Close | Hove | BN3 7ET
T: 01273 736217 E: info@felceandguy.co.uk

project: WINDOW REPLACEMENT TO FRONT ELEVATION

location: 110 MARINE PARADE WORTHING

client: MRS G. WALPOLE

drawing: PROPOSED DETAILS OF REPLACEMENT WINDOWS

scale: 1:2 | page: A1

drawn by SM | checked by:

date: Feb. 2025 | drawing number: 2835 - 02 | revision:

© Felce & Guy Partnership LLP