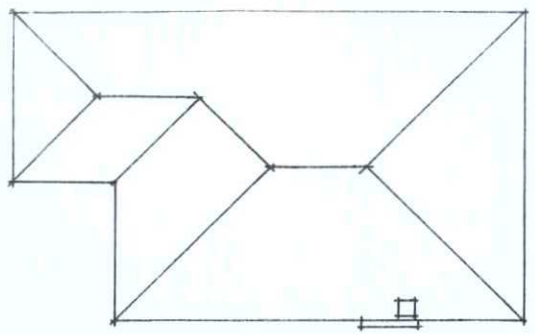

Existing Roof Plan 1/200

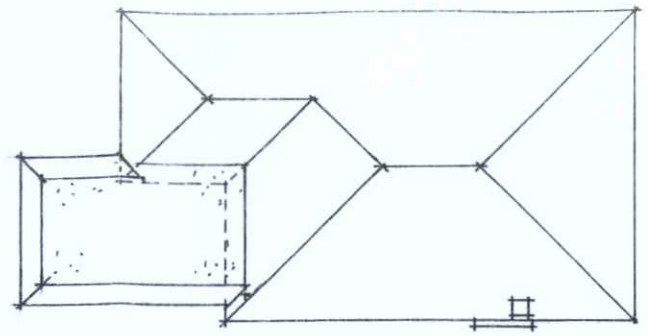

Proposed Roof Plan 1/200

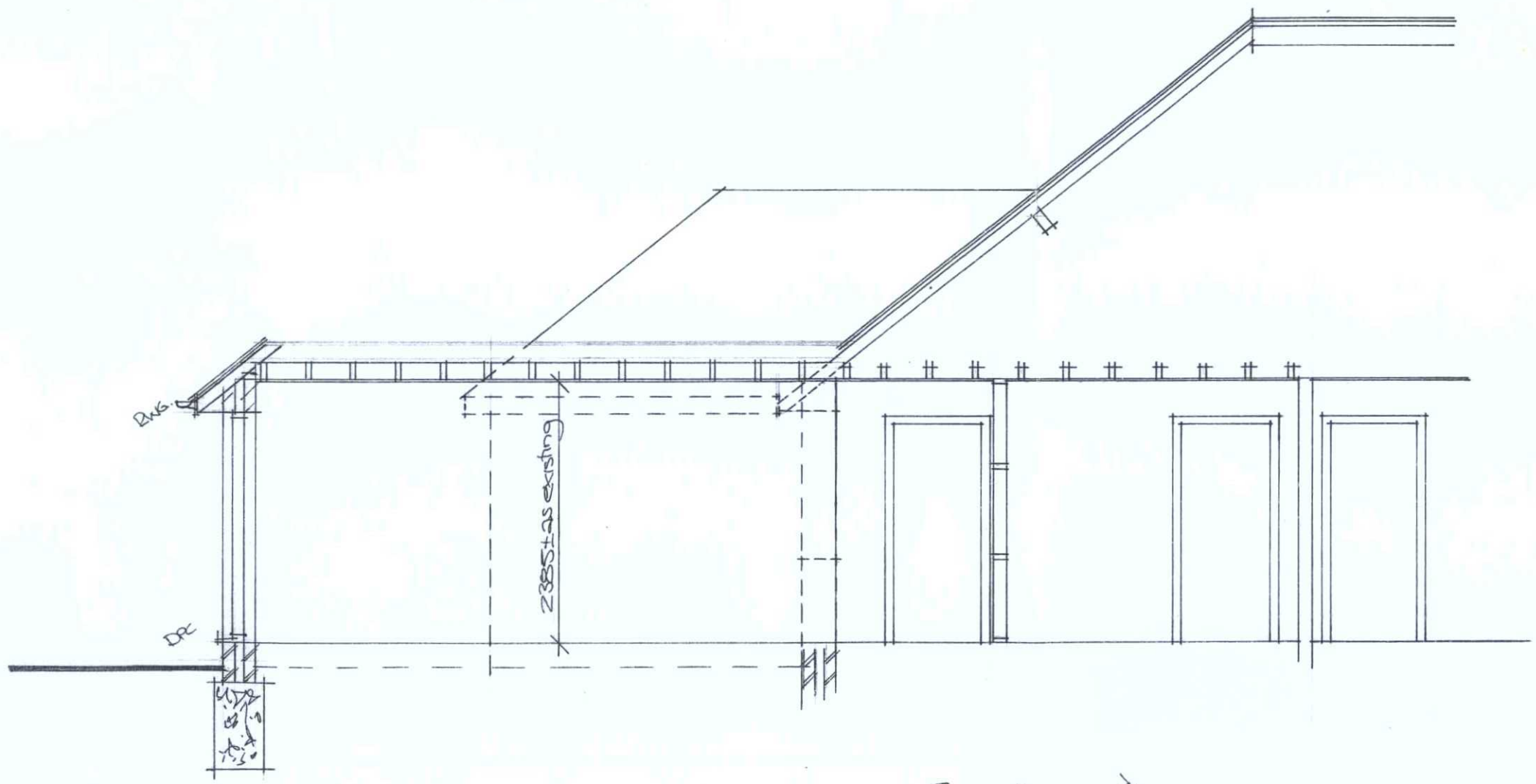

Section on A.

Section 1/50

Proposed rear extension: *Mr & Mrs Wood*
13 HADLOW WAY LANCING
WEST SUSSEX BN15 9DE

Amendments
Rev A: 17/02/2012 - Part Pitched roof detail added, section A & Proposed roof plan revised to suit.

Paul Trussler
44 Firle Road
Lancing
West Sussex
BN15 0NZ

Drawing No. 211/435/4 A