THIS DRAWING IS THE PROPERTY OF STEPHEN BROMLEY ASSOCIATES
AND MUST NOT BE REPRODUCED IN PART OR IN WHOLE OR USED FOR
THE EXECUTION OF WORKS WITHOUT THEIR PERMISSION.
DO NOT SCALE EXCEPT FOR PLANNING PURPOSES.
ALL DIMENSIONS TO BE CHECKED ON SITE PRIOR TO COMMENCEMENT
OF ANY CONSTRUCTION WORKS AND STEPHEN BROMLEY ASSOCIATES
NOTIFIED OF ANY DISCREPANCIES.
WE CAN TAKE NO RESPONSIBILITY FOR ANY WORKS UNTIL THEY ARE
CHECKED AND CERTIFIED TO COMPLY BY THE RELEVANT BUILDING CONTROL.

WEST ELEVATION

A EXISTING

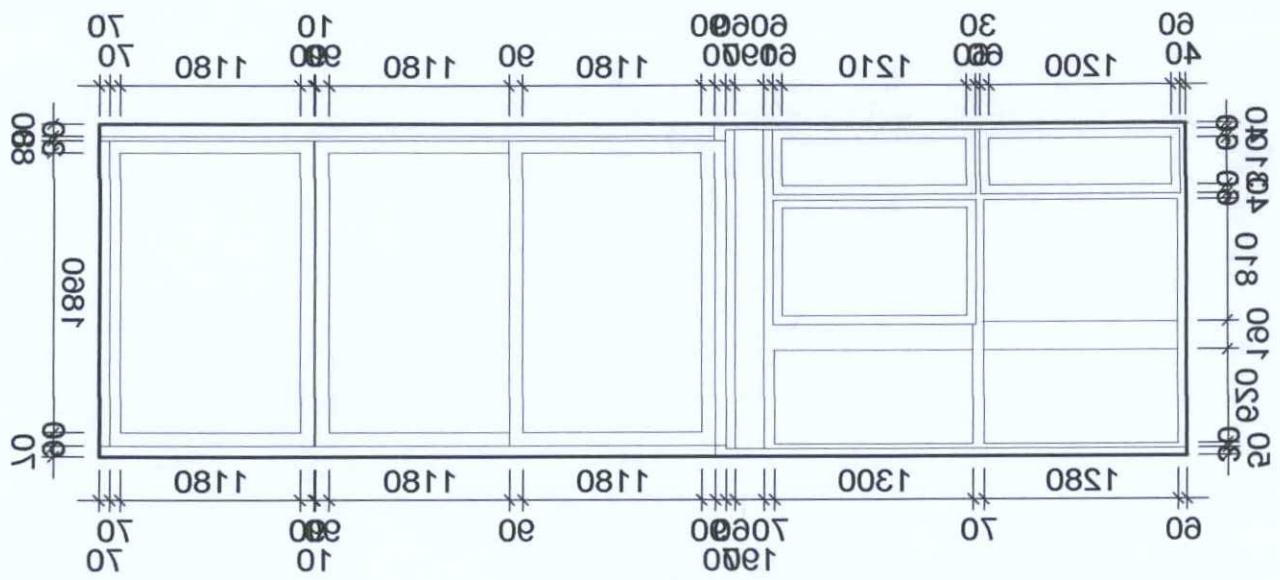

A PROPOSED

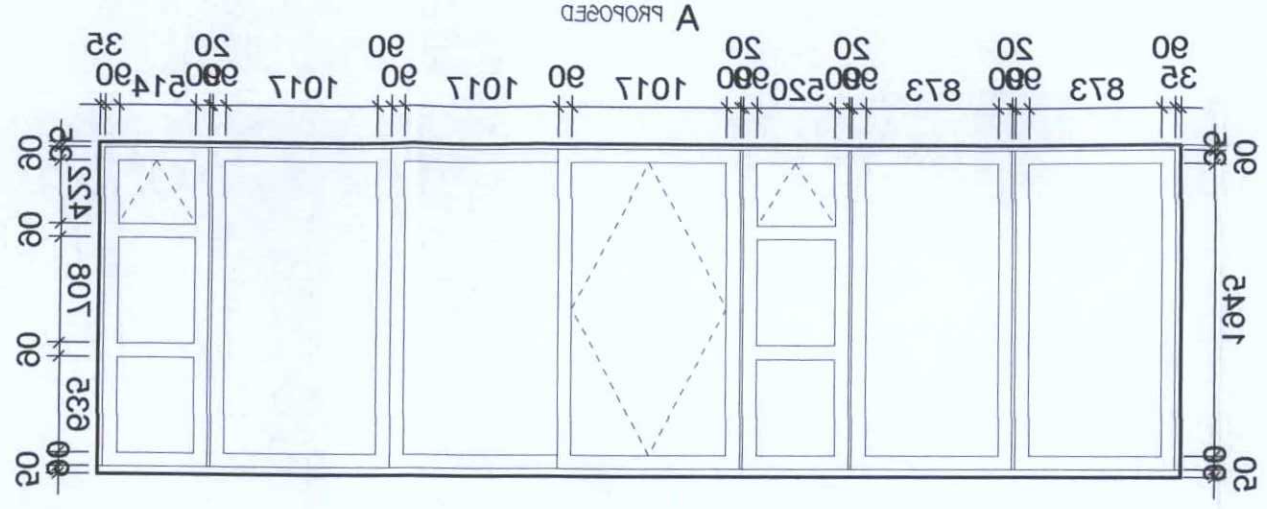

EAST ELEVATION

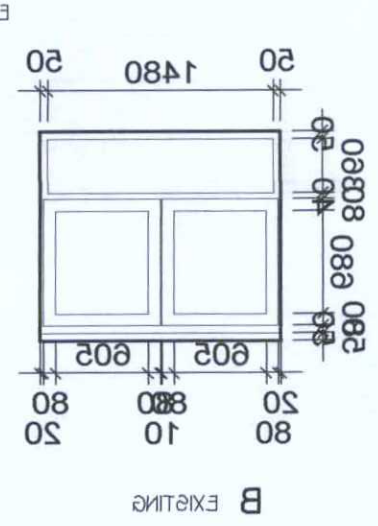

B EXISTING

EAST ELEVATION

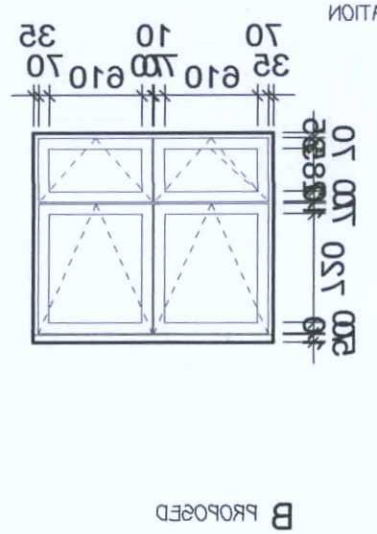

B PROPOSED

EAST ELEVATION

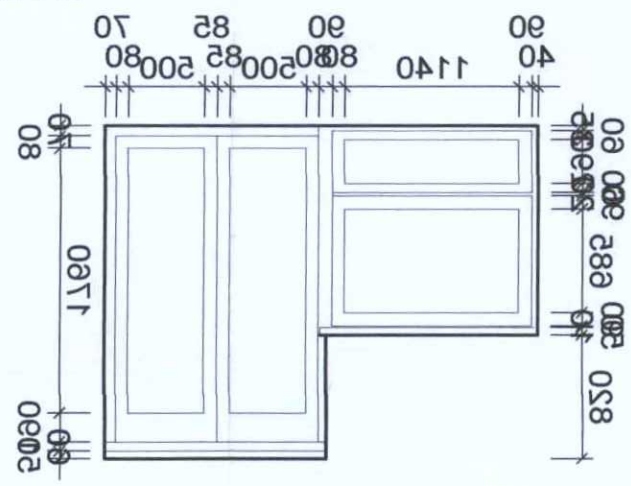

C EXISTING

EAST ELEVATION

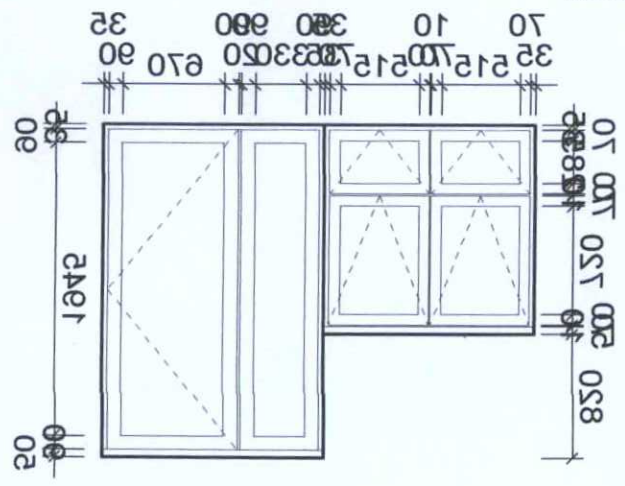

C PROPOSED



ADUR & WORTHING
PLANNING SERVICES

PLAN	AWDM/ 0167/19
DATE VALID	- 4 FEB 2019

STEPHEN BROMLEY ASSOCIATES
5 WEST ST SHOREHAM BY SEA
WEST SUSSEX

REPLACEMENT WINDOWS

AT SCALE 1-50

47 ATLANTIC COURT
FERRY ROAD

Drawing no 1465-1