REF: ADC/0195/10/INVAL

1 BEACH ROAD BN43 5LJ

REPLACEMENT FENCE ON NORTHERN BOUNDARY

ADUR DISTRICT COUNCIL
PLANNING DIVISION
PLAN No. ADC/0195/10
DATE RECEIVED 08 JUN 2010

A

ELEVATION: 1 BEACH ROAD GARDEN sc 1:100

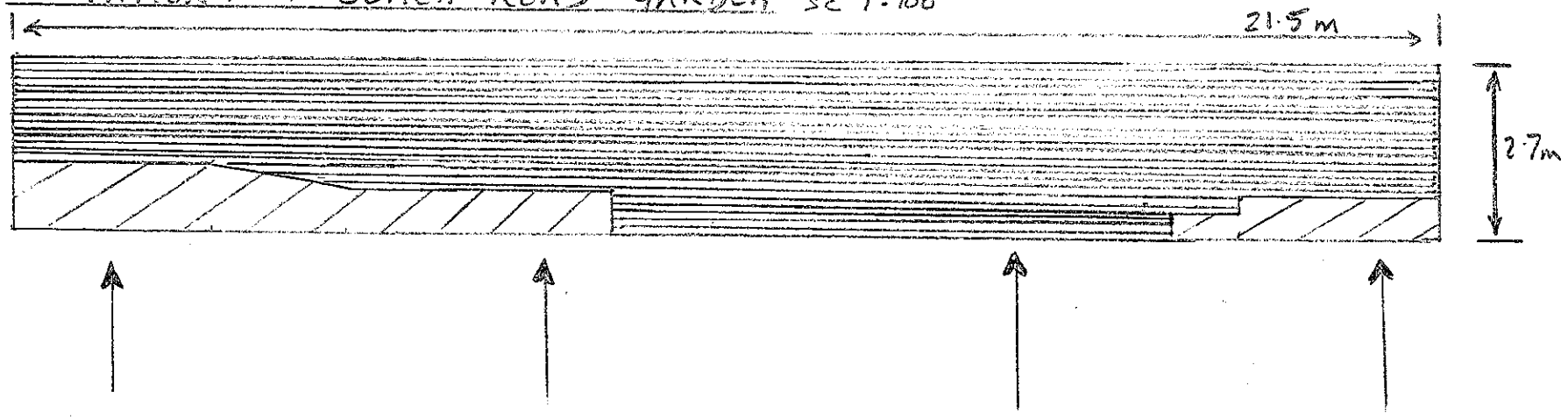

B

SECTION 1 sc 1:50

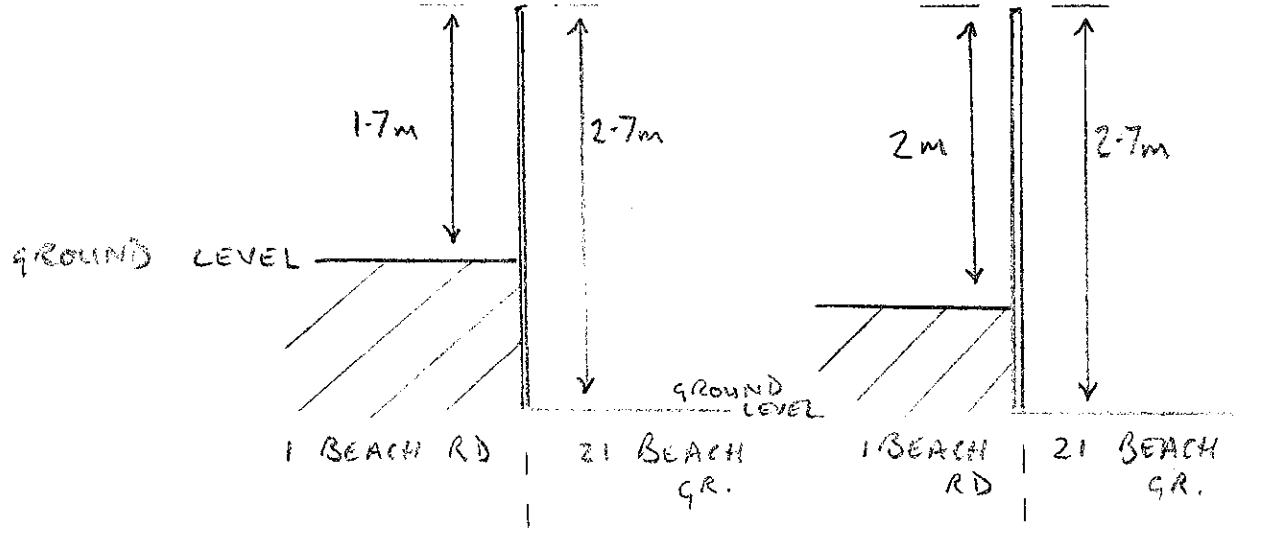

SECTION 2

SECTION 3

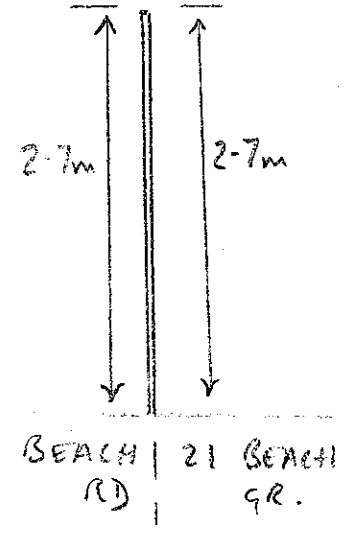

SECTION 4

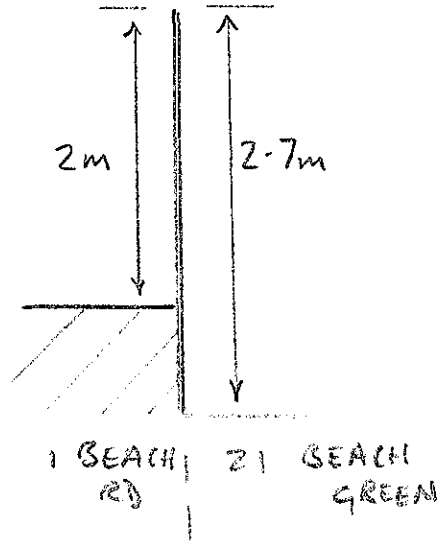

NOTES: 1 BEACH ROAD IS BUILT ON RAISED LAND. THE GARDEN SLOPES DOWN FROM THE HOUSE TO THE NORTHERN BOUNDARY, WHERE THE SITE OF A DEFUNCT CONCRETE TENNIS COURT (PRE-WAR?) DETERMINES THE SHARED GROUND LEVEL WITH 21 BEACH GREEN.

THERE ARE RAISED FLOWER BEDS ON BOTH SIDES OF THE BOUNDARY, ABOVE GROUND LEVEL.