

Existing Elevation

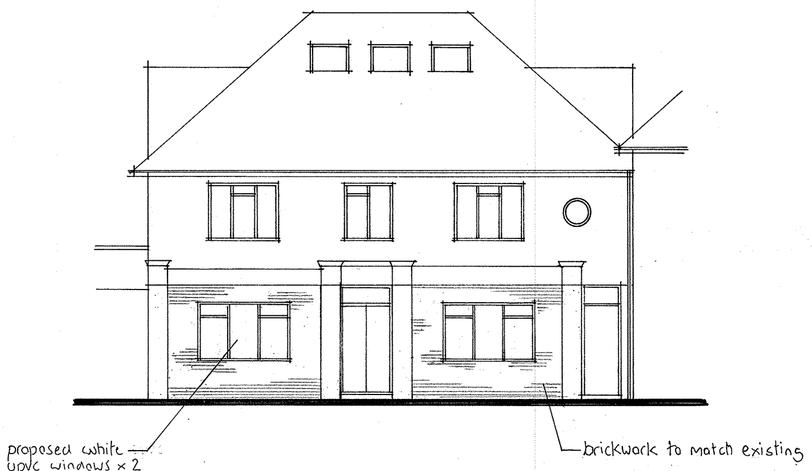

Proposed Elevation

REVISIONS
REV 'A' 27·7·18 windows amended.
REV 'B' 2·9·19 proposed windows amended
REV 'C' 10·9·19 1:20 scale windows shown.
REV 'D' 29·11·19
Proposed windows increased in height to match windows over. Rear window to be retained. Fascias, piers and mouldings all to be retained. Proposed cladding omitted.

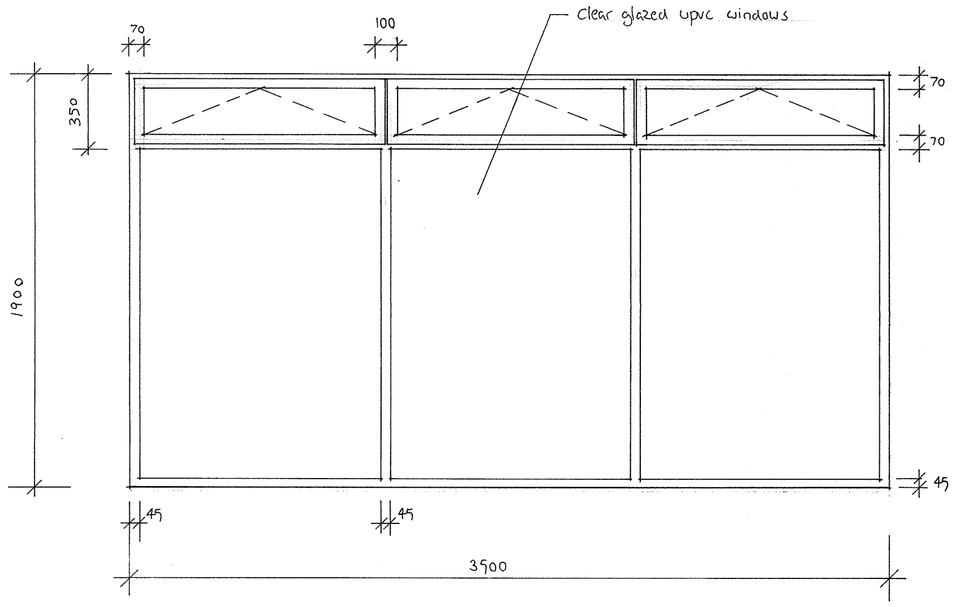

Existing Windows x 2

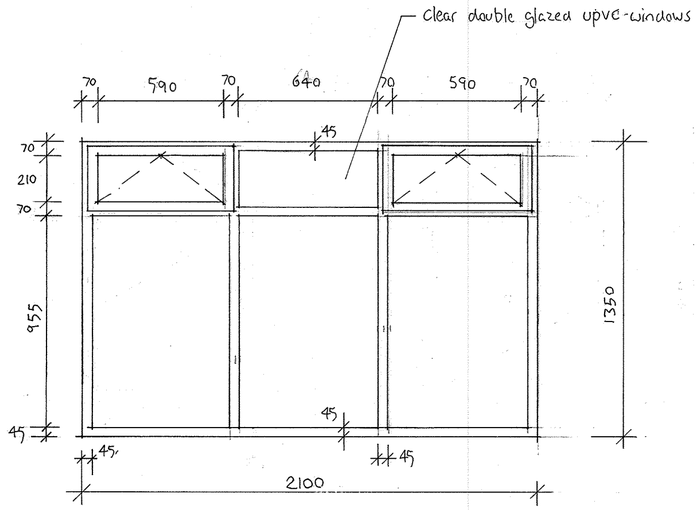

Proposed Windows x 2

A2 PAPER SIZE SCALE 1:100 0 1 2 3 4 5 6 7 8 9 10

1:20 0 200 400 600 800 1m 2m

This drawing is the sole copyright of Insite Planning Ltd.

Insite Planning Ltd
5 Beechwood Avenue
Brighton, East Sussex
BN1 8ED
Tel: 01273 558118
Email: insiteplanning@yahoo.co.uk

Client:

Job:

Proposed Alterations to Front Elevation at:

Seaview House
178 South Street
Lancing

Date: July 2018 Scale: 1:100

Drawing No. 1447/2180 D