Construction Phase Health & Safety Plan

FOR:

NEW BUILD AND THE DEVELOPMENT

AT:

170 BRIGHTON ROAD
LANCING
WEST SUSSEX
BN15 8LL

Issue 1- Date: 5th September 2019

Demolition & Project Consultancy

Construction Phase Health & Safety Plan

CONTACT DETAILS PERTAINING FOR THIS PROJECT

	Contract Title & Address	170 Brighton Road Lancing West Sussex BN15 8LL	New Build Project
	Client Name & Address	254 Brighton Road Lancing West Sussex BN15 8LH	Contact: Richard Procter/Gary Purnell Telephone: E-mail garypurnell@hotmail.com
	Designer/Architect	Cityzen, Maritime House, Basin Road North, Hove, East Sussex, BN41 1WR.	Contact: Charlotte Smith Tel: 01273 915010 E-mail: charlotte.smith@cityzendesign.co.uk
	Project Health & Safety Advisor	Demolition & Project Consultancy 6C The Steyne Worthing West Sussex BN11 3DS	Contact: Peter Marshall Tel: 07833 586410 E-mail: demolitionpc@outlook.com
	Asbestos Survey Report	TR Surveys 6 Royal Oak Cottages Main Road Crockham Hill Kent TN8 6RD	Contact: Terry Read Tel:07939 333932 E-mail: terryread@rocketmail.com
	Local Authority	Adur & Worthing Councils, Portland House, 44 Richmond Road, Worthing, West Sussex, BN11 1HS	Contact: Planning & Building Control Tel: 01903 221068
	Health & Safety Executive	Health and Safety Executive: The Council Offices Station Road East Oxted Surrey	Tel: 01883 732 400 Fax: 01883 732 444 www.hse.gov.uk
	Environment Agency **(Regional Office)**	South East Regional Office, Kings Meadow House, Kings Meadow Road, Reading, Berkshire, RG1 8DQ	Tel: 0370 850 6506

Demolition & Project Consultancy

Construction Phase Health & Safety Plan

	Prepared By	Peter Marshall Date. 5th September 2019	
	Approved By	Richard Procter Date. 5th September 2019	

INTRODUCTION

Section 1	**Description of the Project**
1.1	Location of the Project
1.2	Scope of the Works
1.3	Timing of the works
Section 2	**Management of the Work**
2.1	Management Structure and Responsibilities
2.2	Health and Safety Goals for the Project
2.3	Health and Safety Monitoring
2.4	Methods of Communication
2.5	Selection and Control of Contractors
2.6	Site Security
2.7	Site Inductions and on-Site Training
2.8	Welfare Facilities and First Aid
2.9	Accident Reporting, Recording and Investigation
2.10	Risk Assessments and Safety Systems of Work
2.11	Site Rules
2.12	Fire and Emergency Procedures
Section 3	**Arrangements for Controlling Significant Site Risks**
3.1	Pre-Construction Information
3.2	Delivery & Removal of Materials
3.3	Services
3.4	Adjacent Land Use
3.5	Temporary Structures
3.6	Preventing Falls
3.7	Lifting Operations
3.8	Maintenance of Plant & Equipment
3.9	Traffic Routes
3.10	Storage Materials & Management
3.11	Surrounding Land Uses
3.12	Ground Conditions
3.13	Health Risks
3.14	Noise & Vibration
3.15	Any other Significant Risk
3.16	Asbestos
Section 4	**Existing Information**

Demolition & Project Consultancy

4.1	Existing Services, Surveys, Drawings and Plans
4.2	Asbestos Survey
Section 5	**Site Management**
5.1	Liaison between Parties
5.2	Security
5.3	Site Induction
5.4	Training
5.5	Welfare
5.6	Fire
5.7	First Aid
5.8	Site Rules
5.9	Waste Management
5.10	Permit to Work
Section 6	**Site Risks, Design and Construction Hazards**
6.1	Traffic Management
6.2	Delivery Removal & Storage of Materials
6.3	Services
6.4	Temporary Electrics
6.5	Water
6.6	Wastewater
6.7	Adjacent Land Users
6.8	Stability of Structures
6.9	Working at Height
6.10	Control of Lifting Operations
6.11	Plant & Equipment
6.12	Excavations
6.13	Confined Spaces
6.14	Scaffold
6.15	PPE Maintenance
6.16	Asbestos
6.17	Manual Handling
6.18	Noise
6.19	Control of Substances Hazardous to Health
6.20	Hand Arm Vibration
6.21	UV Rays
6.22	Contaminated Land
6.23	Design, Work Methods & Sequence
6.24	Lead & Other Materials Requiring Precautions
Section 7	**Clients Requirements**
Appendix 1	**Traffic Management Plan for Site**

Demolition & Project Consultancy

Construction Phase Health & Safety Plan

INTRODUCTION-General Information

This Construction Phase Health and Safety Plan had been prepared specifically for this project in accordance with the CDM 2015. The plan has been formulated by taking into consideration the pre-construction information provided by the client, CDM Advisor/Principle Designer, following surveys and risk assessment of the environment by the operations management team responsible for this project.

The Company's Health, Safety and Environmental (HS&E) Standards contain the core arrangements for managing health and safety in all our operations. In addition, a management system has been compiled for assisting the project's operations management team in the planning, management of, recording and communicating of relevant health and safety information to provide a safe place of work, safe systems of work and to provide uniformity and consistency in the management of health and safety.

Every project will have at least one copy of the Company's Health, Safety and Environmental Standards, with every manager receiving their own personal copy.

Company HS&E Standard – "Construction, Design and Management" details how the Company manages the CDM process. The contents page for the Company Standards and for the health and safety management system documents can be found in Company Health & Safety Policy Document... producing safe systems of work tailored to the project. We aim to reduce the provision of generic paperwork and to only provide in this Health and Safety Plan project specific paperwork that should help with the communication and risk management of this project. Other information this file makes reference to, but is not project specific, will be clearly identified with the location where it is available, if there is a need to review these documents they will be provided on request.

The aim of this Construction Health and Safety Plan is to provide clear, concise and specific information required to manage the works and the arrangements for controlling significant project specific site risks. We are committed to providing a safe place of work and continually review our HS&E Standards and systems to provide clear and relevant information through all stages of the project's life.

NOTE: This project is being dealt with by private concern (Clients) and individuals who are responsible for the contracts between all contractors-sub contractors design architects and all associated persons within this project from the initiation to fruition and will be responsible for all works relating to this project.

Position	Name	Responsibility
Project & Contracts Directors	Richard Procter & Gary Purnell	Ensure the upkeep of the plan by regular review (at least once every 2 weeks) and update after any significant change (including change in current legislation) liaison with the client/clients' agents & CDM Advisor/Designer. Attend client's meetings. Write all required procedures, RAMs, CPP for the project, update the plan/drawings including any current legislations.
HS & E Consultant	Peter Marshall	Assist with the H&S plan production and provide H&S guidance and training. Apply all regulations and legislations to accommodate the works in progress as required.

Demolition & Project Consultancy

Construction Phase Health & Safety Plan

SECTION 1. DESCRIPTION OF PROJECT

1.1 Location

Site Address	170 BRIGHTON ROAD LANCING WEST SUSSEX BN15 8LL	Eastings: (X) 519835 Northings: (Y) 104192

All site access will be via the main entrance to the site accessed from A259 BRIGHTON ROAD. Note: The site lays on the Southern side of the A259 so if approaching from the WEST the side is on the right therefore do not cross the road but continue down the A259 towards SHOREHAM to the roundabout and approach from the EAST going towards WORTHING to reduce possible traffic disruptions and reduce the risk of accidents. Equally when approaching the site from the EAST. ***(Refer to TMP 1 within this document)***

All vehicles will approach with care to the site there is no parking on site due to the area required for the new build, thus alleviating any site parking. All parking will be on the A259 BRIGHTON ROAD in permitted spaces which are situated along the A259

BRIGHTON ROAD is a built-up area surrounded by live properties as is the local area, all drivers of vehicles are to be aware of pedestrians, cyclists/motorcycles/mopeds and children/pushchairs and the like which may be using the road/footway along the existing highway. No parking will be allowed to any areas not owned by client and on the adjacent roads. There is space within the site footprint for all vehicles to park.

Parking in any of the adjacent roads can take place but only in accordance with Highways Enforcement/Police and Local Authority regulations/signage which must be adhered to. Strict Traffic Management must be observed by all contractors using the site.

Note: Demolition to the former structure has already been completed, along with all asbestos removal as per the report issued, this document covers the new build project and as such is reliant on all sub-contractors/contractors to adhere to this document and all related works directed by the client/client's agent. All contractors/sub-contractors will submit their own RAMS (Risk Assessment & Method Statement) along with insurances and certificates relating to their operatives. All documentation MUST be submitted to the Client prior to any works commencing for their approval.

1.2 Scope of the Works

Ascertaining their position and Isolation of all services will be carried out by the client. All temporary services will be carried out by the appointed contractor, it is understood at the time of this document being written that a TBS has been installed, for use on site.

General Scope of Works.

An Asbestos Refurbishment & Demolition Survey must be carried out prior to any works commencing (CDM 2015) A survey has been carried out and report issued to the client and the demolition contractor prior to the demolition of the existing structure.

Contractors as permitted by the client will carry out all works required to build/develop the new structure. Contracts/documentation will be issued as tenders are released.

Demolition & Project Consultancy

The client is responsible for maintaining safety within the site and therefore must ensure that all contractors are knowledgeable/competent and have the required insurances and all documentation to work within the confines of the site project in a safe working practise.

A Duty of Care is the responsibility of all persons involved with in this project.

1.3 Sequence of Works

1. Site set up and mobilisation, welfare and delivery of plant and equipment.
2. Ground works to commence
3. Finish of all ground works and removal of excess waste and materials.
4. New build to commence as per drawings issued.
5. Complete fixtures and roof to structure
6. Clear site and removal of plant/welfare

1.4 Timing of the Works

Contract Period	**12 Months (Changes may occur to time scale)**
Site Start Date	**TBC Proposed start September 2019**
Form F10	**Submitted and Issued.**

The normal hours of work will be as follows:

Monday to Friday	08.00 – 17.00	Bank holidays & Sunday	No Working
Saturday	08.00 – 13.00		Any works carried out after these hours MUST be agreed by the Client/Clients agent/local authority

SECTION 2. MANAGEMENT OF THE WORK

2.1 Management Structure and Responsibilities

The general health and safety responsibilities are as laid out in the Company's Health and Safety Policy and the competency of the operations management team are as identified on the Clients competency.

Richard Proctor/Gary Purnell have been appointed to be the senior team responsible for this project; in his absence a person will be appointed prior and will become the senior manager, all other key persons are shown at the front of this document.

2.2 Health and Safety Goals for the Project

In addition to achieving the Company's health and safety objectives, KPI's thresholds etc. which are to be located In the Project Managers Office this project team has the following goals:

Demolition & Project Consultancy

(a) Health, Safety and Environmental Monitoring carried out at least once every 4 weeks.

(b) To attend monthly reviews of the project's health, safety and environmental performance with the Health, Safety and Environmental Advisor

2.3 Health and Safety Monitoring

Monitoring will be carried out on this project once monthly copies of all Health and Safety Monitoring carried out on this site by the operations management team, the Company's own management team, the Health, Safety and Environmental Advisor, HS&E Auditor or by a contractor's health and safety team / representative will be held in the site file. In addition to self-monitoring, that will be carried out by members of the operations management team in accordance with the responsibilities allocated to them to meet legal statutory requirements and Company HS&E Standards, the site will be monitored by an appointed competent Health, Safety and Environment (HS&E) Advisor with a typewritten Site Safety and Environmental Review Form provided at each visit.

The HS & E Consultant	Demolition & Project Consultancy
Name	Peter Marshall
Telephone	07833 586410
E-Mail	demolitionpc@outlook.co.uk

In addition to visiting site on a regular basis the HS&E Advisor will provide health and safety support as requested or deemed necessary. The HS&E Advisor will review the project's health and safety performance with the operations management team at each visit and produce a site plan in conjunction with the team, a copy of the site audit/visit health and safety review will be maintained on site. The project will be provided with up-to-date HS&E Standards and notified of any legal or system changes via communication from the Health, Safety and Environment Department to ensure current legislative and organisation requirements are continually updated.

2.4 Methods of Communication

NOTE: As areas involved for the concept evolves the Company methods of communication that the project must comply with, are as described in the clients HS&E Policy. The project shall have a health and safety notice board. The H and S notice board will be located at the entrance to the work area, dependant on the site access/egress the board may be repositioned close to the welfare unit but will be clearly visible.

The project specific methods of effective communication are through prestart induction as recorded on all contractor's induction sheet and through toolbox talks as given by the managers/supervisors.

The client would propose to use the following procedures / systems for exchange of health and safety information between contractors,

- Site specific induction for all persons who require access to site areas
- Fortnightly safety meetings with the workforce chaired by a senior member of the site team with HS&E advisor present where available
- Health and safety boards will convey relevant daily risks.

Demolition & Project Consultancy

2.5 Selection and Control of Contractors

The Clients HS&E Standards require that all contractors are evaluated prior to selection, where high risk activities are being undertaken the HS&E advisor will be notified by the project co-ordinator to provide assistance in the evaluation process. All contractors will receive a thorough evaluation of competence. Contractors will be selected across all aspects of intended work which they have potential for participation. Records of contractor evaluations can be located in the main site office, 'contractor evaluation file.

2.6 Site Security

The minimum standards for ensuring protection of the public and a secure site are as defined in the standards within the client's agreements/contracts to the other contractors. Signing in and out will be mandatory for ALL operatives and visitors. The entrance to the site will be closed at all times during the project working hours and equally will be closed and locked after works finish at the end of the day.

2.7 Site Inductions and on-Site Training

Project specific site inductions shall be carried out for all persons required to work on site, they shall be recorded using the site induction form, Site specific training requirements i.e. toolbox talks will be recorded on Toolbox Talk instruction sheet. A copy of the site-specific induction for this project and the records of induction and site-specific training carried out can be located in the site file. These records will be maintained securely as part of the project's data protection policy.

The competency levels of persons will be identified prior to the commencement of the Project and persons provided with the appropriate training to the tasks to be undertaken. Where additional training is identified during health and safety planning or individual's performance development reviews this will be arranged in conjunction with the Company's Human Resources Department.

Operatives will be provided with on-site training for specific activities and safety aspects of all operations will be discussed prior to commencing the activity via method statement briefings or toolbox talks. The HS&E Advisor allocated for this project will provide such on site as is necessary to ensure personnel are working to suitable safe systems of work and thus not reducing the likelihood and severity of injury to personnel, visitors and members of the public. The competency levels for personnel operating equipment, plant etc. whilst working on the site will be checked by the operations management team, identified on the site induction form and copies of any formal training certificates will be kept on site until the work is completed, they can be located in the site file.

2.8 Welfare Facilities and First Aid

The minimum standards to be complied with are as set out in the health and safety at work act 1974, and the CDM regulations 2015. Workplace health, safety and welfare. Workplace (Health, Safety and Welfare) Regulations 1992. Approved Code of Practice and guidance. "A short guide for Managers" INDG244 (Rev 2)

"Employers have a general duty under section 2 of the Health and Safety at Work etc. Act 1974 to ensure, so far as is reasonably practicable, the health, safety and welfare of their employees at work. People in control of non-domestic premises have a duty (under section 4 of the Act) towards people who are not their employees but use their premises. The Regulations expand on these duties and are intended to protect the health and safety of everyone in the workplace and ensure that adequate welfare facilities are provided for people at work."

Demolition & Project Consultancy

The project specific welfare facilities provided for this project

Maximum number of persons on site	8	Toilet Built in unit	Yes
Mess rooms	Yes	Drying rooms	1
Water supply	Yes	Equipment for heating food	Yes
Equipment for heating drinks	Yes	Heating supplied with cabin/unit	Yes

Welfare will consist of a welfare unit and an office/meeting room cabin and will ensure that it conforms to the CDM 2015 Regulations. Typical welfare unit (HSE Compliant-Regulation 22) will consist of an existing separate room which is fully equipped and self-sufficient with power, lighting, cooking facility, hot & cold water, heating and drying room, and fully equipped canteen and rest area. (Organised by the contractors on site)

Housekeeping Arrangements: Operatives will be allocated for welfare maintenance

The number of appointed first aiders / appointed persons for this project will be suitable for quantities of personnel on site. The names of first aiders will be known once the site file has been completed and their certificates will be placed in the site file, and location of first aid equipment will be identified on the responsibility form for this project.
These persons will also be identified to all employees during their induction and first aiders will be identified by green cross stickers on helmets, signage on office door. The first aid requirements for this project have been specifically risk assessed for the type of work and numbers of persons.

No. of first aid boxes & size:	First aid provision will be suitable for up to 25 persons on site
Location of first aid boxes:	First Aid will be maintained in all site offices and clearly signed.

Site map and locations of the First Aid/Fire points will be displayed within the welfare/site office and on all floors clearly visible. The first aid boxes and equipment will be re-filled after each use, visibly checked each week during the weekly inspections and monthly checks carried out. All first aid boxes will be replaced when the use by dates have been exceeded

2.9 Accident Reporting, Recording and Investigation

Deaths All deaths to workers and non-workers must be reported if they arise from a work-related accident, including an act of physical violence to a worker. Suicides are not reportable, as the death does not result from a work-related accident.

Specified injuries to workers. The list of 'specified injuries' in RIDDOR 2013 (regulation 4) includes:

- a fracture, other than to fingers, thumbs and toes;
- amputation of an arm, hand, finger, thumb, leg, foot or toe;
- permanent loss of sight or reduction of sight;
- crush injuries leading to internal organ damage;
- serious burns (covering more than 10% of the body, or damaging the eyes,
- respiratory system or other vital organs); scalping's (separation of skin from the head) which require hospital treatment;
- unconsciousness caused by head injury or asphyxia;
- any other injury arising from working in an enclosed space, which leads to;
- hypothermia, heat-induced illness or requires resuscitation or admittance to hospital for more than 24 hours.

Demolition & Project Consultancy

Over-seven-day injuries to workers This is where an employee, or self-employed person, is away from work or unable to perform their normal work duties for more than seven consecutive days (not counting the day of the accident).
The accident reporting, recording and investigation will be in line with the requirements outlined in the Company's HS&E plan. All incidents will be investigated, the person undertaking the investigation and the type of investigation will depend upon the severity or potential severity.

The operations management team will report any potential RIDDOR (The Reporting of Injuries, Diseases and Dangerous Occurrences Regulations 2013) injuries immediately to the project's HS&E Advisor who will provide support and assistance. The requirement to report all incidents, method of recording and location of blank incident reporting sheets will be communicated to persons working on the project during the site induction.

Where any accident is reportable to the Health and Safety Executive the employer of the injured person will be responsible for ensuring it is reported, a copy of the F2508 will be filed (confidentially) on the site. Where a contractor does not provide evidence of reporting to the Health and Safety Executive the project's operations management team will report it directly to the Health and Safety Executive on behalf of the contractor.

The completed reports should be issued to the following:

By Post	By Telephone	By Fax	By E-Mail
Incident Contact Centre Caerphilly Business Park Caerphilly CF83 3CG	0845 3009923	0845 3009924	riddor@natbrit.com

Investigations will be carried out and risk assessment reviews undertaken following the investigation. Where lessons can be learnt Safety Alerts, Toolbox Talks, Information Sheets or other appropriate media will be used to communicate the information across the Company.

Significant near misses will be treated in the same manner as an accident with appropriate investigations undertaken. The specific method of near miss reporting for this project is the completion of near-miss cards or verbal instruction via the open-door policy. Incident information and records of investigations shall be kept in the site file securely for data protection of any individuals who may be named. Incident report forms and incident investigations shall not be released to any third party without formal permission from the Company's senior management team.

2.10 Risk Assessments and Safe Systems of Work

Risk Assessments will be provided for the workplace and for individual operations involved in the project. Method statements and permit to work systems will be introduced as applicable, these will be mandatory for high risk activities.

The Company Health, Safety and Environmental plan include the systems to be used for identifying hazards and for recording risks assessments. These shall be completed for risks identified on the project undertaken by our employees.

Demolition & Project Consultancy

A log of all contractors and risk assessments/ method statements required can be found in the site file, this will be updated as contractors are appointed through the lifetime of the project. The project's operations management team will ensure that all risk assessments and method statements have been briefed to all relevant personnel and keep records of briefings held on site in the site file.

As the works phase unfold it may be necessary after assessing areas of works to write a separate risk and method statements for those works being carried out due to changes within the programme which require individual assessment these will be written as an addendum and placed into the site file. Copies will be sent to the CDM-Advisor/Designer/Client for information.

Where contractors are used to undertake the works, the operations management team will review the risk assessments and method statements they produce, where the work is identified as high-risk additional support will be provided by the HS&E Advisor. Contractors will not be allowed to work on this project until they have provided a relevant risk assessment / method statement as appropriate and received a positive review back from the operations management team.

Method statements and risk assessment reviews will be attached to the document reviewed.

All Risk Assessments and Method Statements will be reviewed by the CDM Advisor/Designer and any comments he may have will be actioned as necessary and all documentation amended where required. The requirements for other risk assessments required by specific legislation are also identified in the Company HS&E Standards and where risks are identified they shall be used. A "permit to work" shall be issued by the appointed person, the persons issuing and receiving the permit will sign it off and a copy of the permit will be held by both parties, when the work is complete the appointed person will check the work area before closing out the permit. Copies of permits to work will be filed in the site file.

2.11 Site Rules

The specific site rules for this project are located in the site file and within the client's policy. A copy of these rules will be issued to all contractors at the pre-start meeting / induction and will be brought to the attention of every person working on site during the site induction. A copy of the site rules will be displayed on the project's health and safety notice board; these will be reviewed throughout the project's duration.

Employees who breach health and safety site rules will be subjected to the disciplinary procedures as laid down in the Company's H & S Policy. Where contractors breach site rules the Project Manager or Site Manager will first issue TWO verbal warnings.

If a third breach takes place, a written warning is issued to the offending contractor(s) management personnel and or temporary suspension from site.

Any further breach in rules that expose themselves or others will be firmly dealt with by removal from site. A formal report will then be sent to client, s offices to advise relevant Contract Directors of the action taken and causation.

Drugs and Alcohol

The client operates a 'zeros tolerance attitude to drink and drug abuse and will proceed to take swift and prompt action against those who breach company policy or site rules.

Demolition & Project Consultancy

A copy of the 'Drugs & Alcohol' Policy can be found on the site notice board. This policy will also be clear to site personnel during Inductions and safety briefing sessions.

A full list of site rules will be sited within the welfare facilities. They will be updated on a regular basis and will consist of but not limited to the following.

- All PPE must be worn at all times applicable to the tasks being carried out. The minimum requirement for PPE on site will be Hard Hat, Gloves, Safety Boots and Hi Vis Garments. Other PPE task specific will be worn as stipulated with the method statement and risk assessments produced for the specific item of work.
- All tools must be kept clean and maintained in good working order and be locked away or made safe at the end of the working shift.
- All personnel must be aware of the contents of the method statements, risk assessments and company health and safety policy and the registers should be signed and dated by each member of staff before works commence.
- All operatives must observe a strict hygiene policy and thoroughly wash hands before eating or drinking to eliminate hand/mouth contamination and the possibility of infection due to Weils Disease.
- All staff must be aware of all evacuation procedures and location of assembly points and first aid stations together with positions of alarms and fire points
- All staff must act in a responsible way at all times on site and ensure their safety and safety to others is paramount at all times. Any horseplay will result in immediate dismissal from site
- The site will be a no smoking site smoking will be allowed in designated areas only.
- Anyone caught either under the influence of alcohol or drugs will be dismissed from site.
- All staff will report any near misses to their site supervisor who will assist in compiling the relevant form.
- Staff will report all accidents to the site management however small and all details will be entered within the accident book sited within the site office.
- All staff must be suitably dressed for their work application. Shorts, track suits and the like are NOT permitted on this site.

2.12 Fire & Emergency Procedures

The requirements detailed in the Company Standards Fire Prevention, Health and Safety Emergency Preparation and Response will be complied with and made specific to the project.

The Construction Site Fire Safety Plan specific for this project will identify access for emergency vehicles to site, fire assembly point, persons appointed as fire wardens, firefighting equipment requirements, means of raising the alarm, the position of highly flammable material stores areas etc. and detail the specific risks and controls appropriate to this project.

The Emergency Notice for this Project will be displayed on the site notice board and the details shall be communicated to all personnel during their site induction.

Site fire points will be set up on site and will be highlighted on the site plans. All extinguishers will be serviced and in date at the commencement of the contract and will be serviced as necessary during the contract period

Demolition & Project Consultancy

SECTION 3. ARRANGEMENTS FOR CONTROLLING SIGNIFICANT SITE RISKS

All works carried out will be in accordance with the relevant health and safety legislation, primarily the requirements set out in the Health and Safety at Work Act 1974, giving particularly regard to:

Providing safe place of work	The provision of competent person
Safe plant & equipment	Provision of information

Instruction and training and The Management of Health and Safety at Work Regulations which requires risk assessments to be carried out in order that significant risks are identified, and suitable and sufficient control measures are utilised.

The general controls to be employed for controlling significant risks are those identified in the Company's Health, Safety and Environmental Standards i.e. planning and implementing management systems. The specific significant site risks for this Project can be found in the site file

3.1 Pre-Construction Information

All relevant and significant pre-construction information will be recorded and placed in the site file.

3.2 Delivery and Removal of Materials (including Waste).

The site supervisor will ensure all deliveries are safely manoeuvred into a designated position to minimize disruption and keep organisation of the traffic routes. Via task analysis, the Project Manager and HS & E Advisor will record and control all significant findings on site and ensure submitted systems of work supplied by contractors are suitable and sufficient in their design.

Due to the site areas location and its space all materials will be delivered as required and HIAB vehicle used to position the materials on to the site.

During this operation Banksmen will be used and protective barriers at the West and East sides of the site to protect any public from entering during the vehicle operations. ***(Refer to TMP-2)***

The Project Manager, Site Manager and H.S&E Advisor will carry-out on site reviews and audits to systematically analyze safe systems of work for compliance

All waste will be sorted into necessary categories and all skips will have signs informing operatives of their contents. All vehicles skip's and containers will be sheeted before removal from site.

Wheel Cleansing.

Due to the site area it is not envisaged that vehicles will not be allowed onto the site area, where skips/bins are required if haulage vehicles do enter the site grounds then prior to egress of that vehicle any soils/muck on the wheels will be washed/cleaned away prior to that vehicle accessing the main highway.

Any soils/waste will then be cleared from the footway and overspills from the highway prior to works commencing.

Demolition & Project Consultancy

3.3 Services and Overhead and Underground Services

All services relevant to the site are be disconnected by the client before any works commence and written certification explaining all aspects of the isolations will be submitted. Copies will be submitted to all relevant parties. Copies will be held in the site file. Temporary Builders Supply will be arranged by the client and all documentation relating to connections and supply will be placed into the site file.

All operatives/site personnel will be made aware of the TBS which will be covered during toolbox talks and induction to site visitors.

If available all copies of service drawings will be displayed on site and held within the site file.

3.4 Accommodating Adjacent Land Use

There are domestic dwellings in the surrounding areas to the site which should not be affected by these works, however all dwellings within the direct vicinity will be made aware of the proposed works which will be dealt with by the client. The site itself sits in its own grounds All necessary precautions MUST be carried out to protect the public from injury and accidents.

The control of dust, noise and access to site will be monitored thoroughly and actions immediately remedied where required. Where there are party wall issues within this project the client/CDM Advisor/Client/PD will deal with them.

3.5 Temporary Structures

Scaffold will be erected by a licenced scaffold company. If identified that there is a requirement to provide support systems to retain the structures which shall be assessed throughout the entirety of the refurbishment/demolition phase of works. All scaffold works will conform to current regulations and legislations. RAMS to be issued by the scaffold company along with relevant insurances and any wind design that may be required.

The law requires that employers and self-employed contractors assess the risk from work at height and go on to organise and plan the work so it is carried out safely. You must otherwise prevent or arrest a fall and injury if work at height is necessary.

Working at Heights -INDG401(rev2), published 01/14
HSG33 (Fourth edition, published 2012)

3.6 Preventing Falls

Specific risk assessments will be developed. Where contractors fail to produce a system of work that sufficiently reduces risks to members of the workforce, then the client & H&S Advisor, in conjunction with the relevant contractor(s) will develop a suitable system of work to ensure the health and welfare of site personnel performing significant works, other personnel and members of the public.

Demolition & Project Consultancy

3.7 Control of Lifting Operations

Crane Operations: Where it is necessary to carry out craneage duties, a specialist crane hire company will be engaged to bring to site a mobile crane with sufficient safe lifting capacity for the task in hand. All lifting equipment, certificates of crane worthiness and operator competency certificates etc. are to be supplied by the crane hire company, copies will be held in the site file.

3.8 Maintenance of Plant and Equipment

The Provision and Use of Work Equipment Regulations 1998 (PUWER) The Lifting Operations & Lifting Equipment Regulations 1998-2002 (LOWLER) require work equipment and plant to be maintained so it remains safe and the maintenance operation is carried out safely

All plant and equipment will be subject to daily inspection by the operator / user as a minimum. All vehicles on site must have provision of inspection or service before arrival on site.

Copies of all inspection sheets will remain in the file on the specific item of plant and equipment used on this site project during the phase works.

All plant and machine operators where required will have suitable certification for items of plant intended for use. To be produced by the contractors using all plant and equipment.

3.9 Traffic Routes / Segregation &Traffic Management Plan

All traffic and pedestrians entering the site will do so via the ACCESS/EGRESS route, all traffic gaining access/egress for the site must adhere to the highway regulations and any restrictions governing the highways in order to gain access to the site from the existing roads. Delivery restrictions are in place, the road is a busy access route for other retailers within the site area.

All site deliveries/collections should be co-ordinated to be carried out after peak hours where safe to do so. All traffic enforcement/local authority/police and traffic –highway enforcement signage must be adhered to.

3.10 Storage, Materials and Management

Storage of general materials will be generally offloaded direct into the site as it is required due to the small area given on the site, therefore as materials are required and where laydown areas are possible to store such materials this will be executed in stages for deliveries, with only expensive materials under lock and key within a selected Store, designated room store area or laydown area.

Waste storage will be minimised within the site to ensure no debris or hazards are caused.

All waste material will be disposed into the relevant skips. As space allows any waste to be stockpiled then removed at regular intervals, under traffic management plans within this document. ***(Refer to TMP-2 waste removal)***

Demolition & Project Consultancy

3.11 Surrounding Land Use and Restrictions

The road infrastructure around the site are operated by the highways and local authorities, all necessary measures must be taken to prevent injury/accidents to the public and work force which will include all visitors to the site. The control of dust, noise, access, and egress within the site will be monitored on a daily basis by all contractors. It must be noted that due to the area and the culture that all public may not be fully conversant with the English language and signage.

3.12 Ground Conditions

The site stands within its own area, there are live properties surrounding the site area.

3.13 Health Risks

Health Risks Including:

Manual Handling	Noise and Vibration
Hand Arm Vibration	Live Services
Using Electric Tools and Appliances	Asbestos

Other significant risks applicable to this site and its works could be within the following categories:

Falls from Scaffold	Stair ways blocked/debris/rubbish uncleared
Falls from height	Escape routes blocked by waste/other materials
Trips and Slips from untidy areas	Fire routes for evacuation not displayed

The Health and Safety at Work etc. Act 1974 (HSW Act) requires employers to ensure the health and safety of all employees and anyone who may be affected by their work, so far as is reasonably practicable. This includes taking steps to control slip and trip risks.

Employees have a duty not to put themselves or others in danger and must use any safety equipment provided. The Management of Health and Safety at Work Regulations 1999 require employers to assess risks (including slip and trip risks) and, where necessary, take action to address them.

3.14 Noise & Vibration

It is the policy of the client to ensure that all appointed contractors will minimise noise as far as possible by using plant which is well maintained with silencers which give the best noise reduction.

When plant or equipment producing excessive noise is idle, it will be switched off. All generators if used and as appropriate will be of the silenced type. Excessive noise signs will be posted warning of the activity and the requirement of mandatory hearing protection.

3.15 Any Other Significant Risks

Significant risks are those that are not trivial in nature and are capable of creating a real risk to health and safety which any reasonable person would appreciate and would take steps to guard against. What can be considered as 'insignificant' will vary from site to site and activity to activity, depending on specific circumstances

Demolition & Project Consultancy

3.16 Asbestos

This asbestos identified in the previously completed surveys has been removed as required under the current CAR 2012 regulation. Should additional asbestos materials be discovered during the new build project the area must be sealed off with warning signage displayed at every entrance point to the area. The areas must then be communicated to everyone on site via a toolbox talk immediately.

Should anyone become accidentally exposed to asbestos fibres the following procedure must be adopted.

- Stop work move away from the immediate area but do not go to the welfare or other areas where other people are.
- Phone or call for assistance.
- The area must be cordoned off and warning signage displayed.
- Instruct the people what has happened and not to approach you (this is key to reduce the likelihood of exposing others)
- Ask the help to bring some disposable overalls, an FFP3 disposable mask and some asbestos waste bags.
- The exposed person must remove all clothing and place it inside the asbestos waste bag.
- The person assisting must call for asbestos analyst and for a decontamination unit to be delivered to site.
- The asbestos analyst must monitor the area to identify the type of asbestos present and conduct background air monitoring.
- The exposed operative must clean themselves thoroughly inside the decontamination unit.
- The exposed person must then seek medical advice.
- If the analyst confirms that it was asbestos that was disturbed, the incident must be reported to the Reporting of Injuries, Diseases and Dangerous Occurrences (RIDDOR) Regulations.

Section 4. Existing Information.

4.1 Existing Services, surveys, Drawings and Reports

All drawings and plans relating to the site works, to include all service drawings where available will be included within the site file for reference during the contract period. All service drawings, reports and correspondence within this document and all other relevant documents will be included within the site file for reference during the contract period.

4.2 Asbestos Survey.

A full demolition and refurbishment survey has been undertaken and issued, regarding the site at:
170 BRIGHTON ROAD, LANCING. BN15 8LL. Works for this removal and the demolition has already been completed.

Demolition & Project Consultancy

SECTION 5: SITE MANAGEMENT

A dedicated site Foreman/supervisor from the contractor's as agreed and under the contract for the works by the client will control all aspects of the work from commencement to completion.

In the event that the management structure is to be changed formal notice will be given and the replacement manager will attend site together with the former manager to ensure that all aspects of the project are understood. The site Foreman/ supervisor will ensure that all practices and procedures are kept up to date together with all training requirements for all personnel on site.
Furthermore, they will ensure that all aspects of the Health and Safety file are updated on a continual basis and all plans of work and risk assessments are in place and relayed to all members of staff with the completion of the mandatory registers.

The site Foreman/ supervisor will ensure that all aspects of the work are undertaken in compliance with the plans of works and risk assessments and will carry out toolbox talks with a minimum talk being carried out on a weekly basis on a different topic. In the event that a major non-conformance is found all works will cease until an investigation has been carried out and all factors have been rectified and all operatives have been made aware of the deficiency and the procedures to ensure that the same occurrence is not repeated. The non-conformances will be reviewed in accordance with the quality policy as agreed by the client and any acting agents.

5.1 Liaison between Parties.

Regular site meetings will be held on site within the site office. All topics relevant to the works will be discussed with the main objective aimed at the health and safety of the site together with any breach to the site boundaries.

The Client operates a near miss procedure and all of the work force are familiar with the procedures required to operate this procedure in the correct manner and diligence it deserves. In the event of a near miss being reported, and investigation will take place immediately to establish the cause and with immediate respect any necessary control will be implemented to rectify the incident with reviews to ensure that there is no re-occurrence.

5.2 Security.

The site will be manned by staff at all times and before the end of the daily shift all areas of works will be made safe. All items of power/plant will be demobilised.

All tools and equipment will be locked away. To reduce any threat from fire any combustible materials will be stored in a separate area from the working areas away from buildings where physically possible to do so, all skips will be kept away from any water course to ensure that no cross contamination occurs during the loading of the containers waste vehicle.

5.3 Site Induction

Site inductions will be carried out for all persons working or otherwise who are to access any working part of the site. The induction process is not an action to provide any type of training but give a familiarity of the site and its contents. The induction will include but will not be limited to the following:

Demolition & Project Consultancy

The commitment of the senior management of the client ensuring that they carry out these in reference to Health & Safety
The specific roles of all persons involved in the project
What works are to be carried out and the extent of our contract obligations
To discuss and highlight the contents of the method statement including all risks associated with the works.
To explain all site rules.
Traffic Routes and emergency escape routes
First aid details and arrangement for the reporting of accidents or dangerous occurrences
All mandatory areas for specific task-based PPE
Security
Permit to work systems
Location and persons responsible for the issue of PPE
The location of all welfare and sanitary facilities
All emergency procedures
Names and contacts of safety advisor.
Details of any training requirements and toolbox talks

5.4 Training.

The contractor's operatives for their part in the project are trained and qualified as required to specific standards to carry out their trade. All of the others undertaking general labouring duties outside of the appointed contractor will have all necessary trade certificates and experience.

5.5 Welfare, Sanitary and First Aid Facilities

Adequate facilities will be provided to ensure compliance with the CDM 2015 (schedule 2) requirements. The facilities will be within the existing structure and used throughout the working phase. Hot & cold water will be supplied together with adequate heating arrangements, all units will be suitably lit with a means to heat food and make hot beverages. Drying rooms will have suitable provisions to store works clothes and PPE. All facilities will be regularly cleaned and restocked by a dedicated housekeeper.

5.6 Fire

A full risk assessment will be undertaken to identify the fire safety measures which need to be implemented. Fire points will be installed around the site containing all relevant equipment including alarms. Full evacuation procedures will be in place before any works commence for all buildings around the site.

The site will be a no smoking site with smoking only allowed in the designated areas. When carrying out any form of hot works a hot work permit will be raised.

All hot works will cease at least one hour before the end of the shift. All areas will be inspected before the signing off of the hot work permit. When carrying out hot works a fire watchman will be on duty at all times equipped with the necessary equipment in the event of a fire. All combustible materials will be kept away from all buildings and where possible will be removed from site as soon as possible. Before any hot cutting is undertaken all combustible materials will be removed from the area.

Fire drills will be carried out on a monthly basis or when deemed necessary.

Demolition & Project Consultancy

During the site induction all emergency procedure will be discussed together with the location of the assembly points.
Special regard should be given for the access of any emergency vehicle during the site set up to allow egress to all areas as quickly and safely as possible. Ongoing assessment will be carried out regarding the access/egress for emergency vehicles throughout the works programme.

Issues relating to concerns as the works progress must be communicated to the management Clients team immediately.

5.7 First Aid

All first aid locations and procedures will be discussed during the site induction. The Client will ensure that appointed contractor have trained first aiders within the organisation. Sufficient numbers will be present on site at all times.

Routes and locations of the nearest accident and emergency centre will be displayed within the site offices.

The nearest A & E Centre is: Distance from site: 3.2 miles

WORTHING HOSPITAL
LYNDHURST ROAD
WORTHING,
WEST SUSSEX
BN11 2DH

Tel: 01903 205111

or
999

Demolition & Project Consultancy

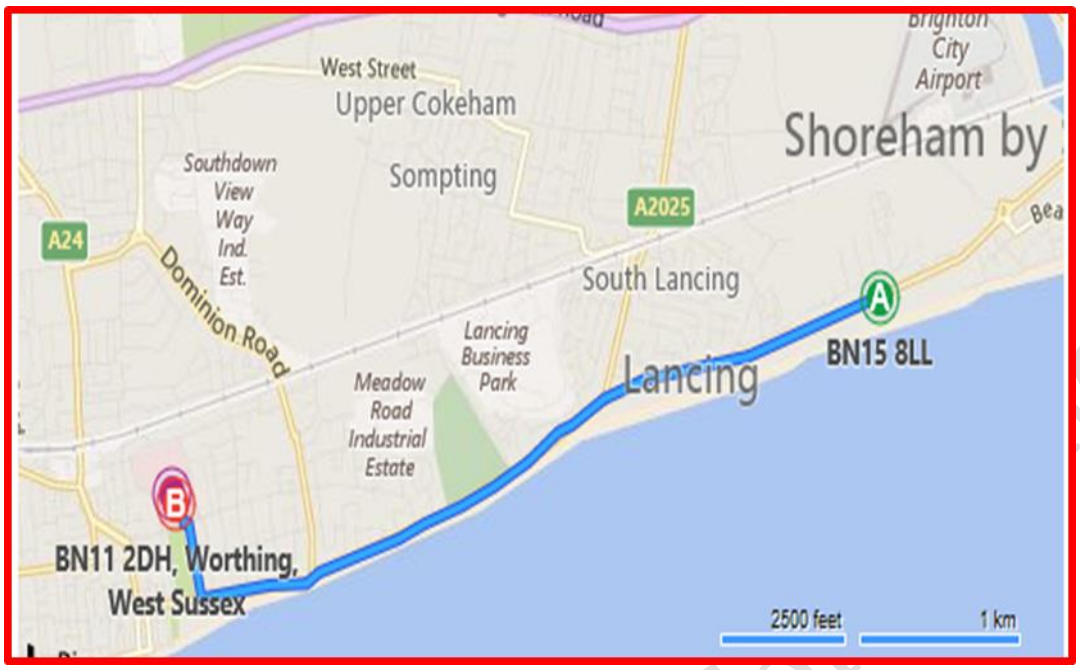

13 min — Moderate traffic — 3.2 mi
Via A259 · *Local roads*

A BN15 8LL

Head west on A259 / Brighton Road toward Old Salts Farm Road

1.1 mi

At roundabout, take 1st exit

1.8 mi

Turn right on to Madeira Avenue

0.2 mi

Turn left on to Lyndhurst Road, and then immediately turn right on to Park Avenue

512 ft

Arrive at Park Avenue

B BN11 2DH, Worthing, West Sussex

All first aid requirements will be kept fully stocked and will be replaced as and when dates of issue have been exceeded. In the event of a major injury the emergency services will be called using 999. The full name and extent of the injury will be explained together with routes for access to the victim.

Where possible any known risk in the area of the victim will be made safe to ensure that any health & safety issues to the emergency services are kept to a minimum.

In the event of the requirement of the air ambulance a suitable area will be maintained and identified to the relevant persons.

5.8 Site Rules

A full list of site rules will be sited within the welfare facilities. They will be updated on a regular basis and will consist of:

- ✓ All PPE must be worn at all times applicable to the tasks being carried out. The minimum requirement for PPE on site will be Hard Hat, Gloves, Safety Boots and Hi Vis Garments. Other PPE task specific will be worn as stipulated with the method stamen and risk assessments produced for the specific item of work.
- ✓ All tools must be kept clean and maintained in good working order and be locked away or made safe at the end of the working shift.
- ✓ All personnel must be aware of the contents of the method statements, risk assessments and company health and safety policy and the registers should be signed and dated by each member of staff before works commence.
- ✓ All operatives must observe a strict hygiene policy and thoroughly wash hands before eating or drinking to eliminate hand/mouth contamination and the possibility of infection due to Weils Disease.
- ✓ All staff must be aware of all evacuation procedures and location of assembly points and first aid stations together with positions of alarms and fire points
- ✓ All staff must act in a responsible way at all times on site and ensure their safety and safety to others is paramount at all times. Any horseplay will result in immediate dismissal from site
- ✓ The site will be a no smoking site smoking will be allowed in designated areas only.
- ✓ Anyone caught either under the influence of alcohol or drugs will be dismissed from site.
- ✓ All staff will report any near misses to their site supervisor who will assist in compiling the relevant form.
- ✓ Staff will report all accidents to the site management however small and all details will be entered within the accident book sited within the site office.
- ✓ All staff must be suitably dressed for their work application.

5.9 Waste Management

*(**NOTE:** Construction businesses in England are no longer legally obliged to produce Site Waste Management Plans (SWMPs) for building projects, after the requirement was dropped under the governments drive to reduce red tape. The Site Waste Management Plans Regulations 2008 were repealed with effect from (December1 2013),*

Demolition & Project Consultancy

All waste arising from the works will be separated into the necessary categories and placed into their respective rubbish bags which will be stockpiled within the premises and when a manageable stockpile has been achieved they will be transported by hand to the skip/loading area for disposal to the necessary recycling centre. All duty of care documentation will be submitted to the client's representative.

All waste arising from the works will be dealt with in accordance with the Environmental Protection Act 1990. Most waste from the works will be classified as Non-Hazardous although there will be skips of non-notifiable asbestos waste dealt with by the asbestos removal contractor. All skips/haulage waste vehicles will be checked for secure load and sheeted before leaving site. All materials are to be removed from site there is no allowance for the burning on site on any type of materials.

5.10 Permit to Work

A permit to work system will be employed throughout the duration of the works these will include the following operations.

Working on or near HV electrics	Working on or near HV electrics
Hot works	Working Heights

Before any works commence within the above categories the area of works will be inspected to identify any known hazards and identify if it is safe for works to continue. After all controls have been put in to place and all staff are familiar with proposed scope of the works the relevant permit will be raised. It will be raised by the site management and will be signed on by the person supervising the works. At the end of the works or shift the permit will be signed off after a final inspection of the workplace has been inspected by the site management.

SECTION 6. SITE RISKS, DESIGN AND CONSTRUCTION HAZARDS

6.1 Traffic Management and coordination of pedestrians

All deliveries and visitors to the site will use the existing road infrastructure but must adhere to all regulations governing the highways, equally the access/egress which are busy routes must be taken with caution due to heavy traffic and pedestrians, bikes and motorcycles. In the event that deliveries or personnel are to access the site they will be given an induction highlighting main areas of concern and will be accompanied on site at all times. All vehicular and pedestrians' routes will be kept clear of debris at all times.

There will be no trailing cables, pipes or the like across any pedestrian walkways. All visitors will be accompanied by a member of the management team after being inducted to the site. All commercial vehicles will be fitted with audible alarms when reversing and all reversing operations will be supervised by a minimum of one Banksman. Site entrance doors/gates and doors are to be kept firmly closed if open they must be manned at all times.

6.2 Delivery, Removal and Storage of Materials

All deliveries/removals to and from the site will be managed. All drivers will phone the site before arrival and the relevant banksman will be informed and ready to receive the delivery as and when they arrive. All personnel will be required to wear the minimum requirement of PPE as explained earlier within this document.

Demolition & Project Consultancy

6.3 Services

The client and the Electricity Company/Distribution Network Operator (DNO) including any other agencies who may require access to the site for works or emergency service/adjacent retail premises and residential properties will be arranged by the site management team. Health and Safety Executive guidance document GS5 and the Electricity at Work Regulations for reference, will be in the site file.

All electrical services to be isolated by a registered NICEIC electrical engineer. All temporary supplies will be carried out by a registered NICEIC electrical engineer. Certification confirming disconnections are to be shown to the Client and the appointed building contractor and a copy kept in the site file.

6.4 Temporary Electrics

A Temporary Builders Supply (TBS) has been placed on the site and is fully operational. Temporary electrics where required will be supplied using TBS or portable generators.

All appliances will be 110 volts. Where required all connections will be made by a competent electrical engineer. Where use of existing 240 volt is used the appointed contractor will ensure that all power sockets and use of tools has been checked and is safe to operate. Contractors will be responsible for ensuring that all power from the existing services are safe and have been checked in order to allow such use. All works will be undertaken in accordance with The Electricity at Works Regulations 1989, BS7671:2008 IEE regulations 17th Edition.

6.5 Water

A suitable water supply will be available throughout the project with a suitable pressure to enable a feed to welfare units. All drinking water will be suitably signed.

6.6 Wastewater.

All discharge to sewers will be in accordance with the relevant drainage authority requirements and in accordance with the control of pollution act 1974, public health act 1937 and water industry act 1999. Issues relating to additional matters uncovered will be made with consultation to the client and water authorities.

6.7 Adjacent Land Users

The client will ensure that the works do not affect any surrounding properties and in the event of any operation which may impede any surrounding establishment, discussions will be made to inform the persons concerned of any action which are liable to cause disruption and the proposals to be put into place to keep any disruption to a minimum.

6.8 Stability of Structures.

The client is to be aware that contractors employed to carry out works for this project at:

170 BRIGHTON ROAD. LANCING BN15 8LL are compliant to the works they will carry out and that their competence is accountable, all contractors/sub-contractors within the remits and tenders issued to those persons will ensure they adhere to the appropriate regulations, have appropriate insurance and supply all RAMS/Documentation that they are Bona fide to carry out the works involved.

Demolition & Project Consultancy

6.9 Working at Height

When any working at height is undertaken areas will be delineated using barriers to eliminate the risk of falling objects. The barrier will be suitably signed. Before any works of this natures are carried out a toolbox talk will be held advising all staff of the areas of works and the type of works being carried out.

NOTE: Refer to the RAMs for this project for detailed works for complete project in conjunction with this document. As required to be issued by the appointed contractor.

Work at Height regulations 2005 (as amended) INDG 401 will be in the site file. TG20:13 provides compliant scaffolds for a limited range of cantilever scaffolds, loading bays, static towers, use of rakers, bridges and protection fans and where required provides a range of compliant scaffolds, which can be boarded at any number of lifts.

6.10 Control of Lifting Operations.

Any lifting operations that may arise will be conducted in accordance with the Lifting Operations and Lifting Equipment Regulations 1998 and Use of Work Equipment Regulations (PUWER) 1998

6.11 Plant & Equipment.

NOTE: As required: All plant and equipment will be suitable for the tasks being carried out and all test certificates will be available for inspection within the site office.

Further copies will be kept within the file on each item of plant. Where plant may be required all plant operators will be trained in accordance with the CPCS (Construction Plant Competency Scheme) or NPORS (National Plant Operators Scheme).

All plant operatives will be in possession of their cards with copies within the file situated in the site office. Any new operatives joining the company will have their cards verified with their respective training organisations.

All plant will be switched off when unattended with the keys removed. All plant will be stored in a central area at the end of each working period and immobilised.

All fuels will be kept in bunded tanks/bowsers which will be kept in a designated area where all refuelling will be undertaken. Spill kits will be available on site and all necessary firefighting equipment will be sited adjacent to the refuelling areas and shown on the site fire plan.

Any electrical equipment will be pat tested in accordance with the Electricity Regulations. All tools will be inspected daily by a competent person.

6.12 Excavations.

Reduction to the slab and foundations as required to ensure foundation stability will be carried out, these are the only works where excavations take place. As appropriate to the design and build.

Demolition & Project Consultancy

6.13 Confined Spaces

It is not envisaged that any working in confined spaces will be required within this project. If any confined space becomes apparent or are uncovered during the works all required monitoring will be carried out and any operative entering the space will have confined space training and the necessary escape equipment where necessary. Before any confined space is entered until a detailed risk assessment and method statement have been compiled and approved. No operatives will enter a confined space until a permit to enter a confined space has been raised. Any personnel entering a confined space will be trained in accordance with the confined space regulations 1997. The training will include emergency evacuation procedures.

6.14 Scaffold

Scaffold will be required for this project, however, should circumstances dictate the need for it to be erected it will be erected by an appointed licenced scaffold company. Design for scaffolding will be provided and issued to the client who will pass all relevant drawings to the as required.

6.15 PPE Maintenance, Issue and Use

The site will be a mandatory PPE site with the minimum requirement of Hard Hats, Safety Footwear, Hi Vis Vests and Gloves. All PPE will be issued to each and every operative and each item issued will be documented in the PPE issue register.

Hard Hats	*Gloves*	*Safety Boots*	*Hi Visibility Vests,*	*Dust Masks (FFP3)*	*Safety Glasses*
EN388	*EN387*	*EN235*	*EN471*	*EN149*	*EN166*

All PPE will be of the correct type for the task being carried out and the relevant BS EN number will be imprinted on each item of equipment. All operatives will wear the above equipment with the addition of any other PPE appropriate to the tasks being carried out and listed within the method statement and risk assessments i.e.: - Ear protection, Eye Protection, respirators and Fall Arrest Equipment

Any operative found not to be complying with the company requirements or any applicable legislation will be dealt with in accordance with our disciplinary procedures as listed within our company health & safety policy. When any breach of PPE regulations occur a toolbox talk will be held containing detailed requirements of PPE for the particular tasks being undertaken. The person/s involved in the breach of regulations will be dealt with as appropriate.

All equipment required to safely complete the works will be issued free of charge.

6.16 Asbestos

An asbestos Refurbishment & Demolition survey has been carried out. Any asbestos contained materials found outside of the report will be assessed by a Licenced analyst and samples sent for checking. On confirmation of the samples the removal will be dealt with as required under current legislation.

Demolition & Project Consultancy

6.17 Manual Handling

Manual handling will be encountered on this site. The manual handling will not be excessive as most of the works will be undertaken by mechanical means. In the event that the manual handling cannot be avoided team lifting will be incorporated. Where lifting in excess of 20kg cannot be avoided specific risk assessments will be compiled. All staff will be trained in manual handling.

(Note: As an employer you must comply with the risk assessment requirements set out in the Management of Health and Safety at Work Regulations 1999 as well as the requirement in the Manual Handling Operations Regulations 1992 (MHOR) to carry out a risk assessment on manual handling tasks. ***Regulation 4(1) of MHOR sets out a hierarchy of measures to reduce the risks of manual handling)***

6.18 Noise.

Contractors and the Client will ensure will minimise noise as far as possible by using plant/equipment which is well maintained with silencers/suppression systems which give the best noise reduction. When plant is idle it will be switched off. All generators will be of the silenced type. All operations will be conducted in accordance with the Noise at Work Regulations 1989. Excessive noise signs will be posted warning of the activity and the requirement of mandatory hearing protection.

6.19 Controls of Substances Hazardous to Health (COSHH).

COSHH assessments will be complied before any of the works commence. The materials that will be brought to site. For all materials on site there will be a technical data sheet present within the site office. Where possible non-toxic agents will be used where possible.

When dealing with any hazardous materials to be removed including fuels oils or other contaminates a specialist contractor will be called in to remove any remaining residue and where required to clean the tanks to enable the issue of a gas free certificate. Hot cutting may be required any gas bottles will be stored in a designated are delineated using Heras fencing/protective barrier system and warning signage to be securely attached and be in view of all persons. Oxygen and propane will be store separately.

6.20 Hand Arm Vibration.

There is risk envisaged on this project however should any arise a full risk assessment including estimated vibration levels will be compiled before any works commence.

In the event that these works are necessary tools with the least vibration will be used and job rotation will be incorporated to reduce the exposure to the operatives.

(Control of Vibration at Work Regulations 2005. The exposure limit value ELV is a daily exposure of 5 m/s2 A(8).) Hand-arm vibration at work: A brief guide (INDG175)

Demolition & Project Consultancy

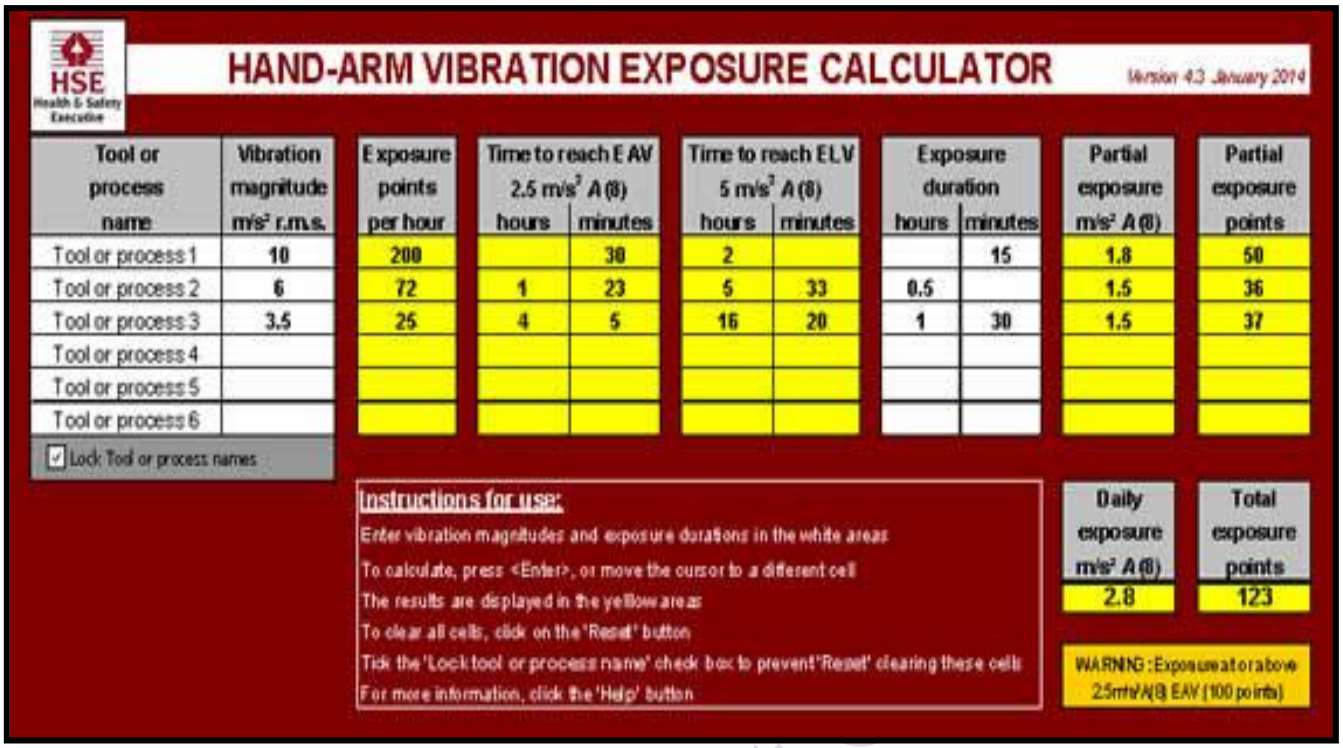

HAND-ARM VIBRATION EXPOSURE CALCULATOR

Version 4.3 January 2014

Tool or process name	Vibration magnitude m/s² r.m.s.	Exposure points per hour	Time to reach EAV 2.5 m/s² A(8) hours	Time to reach EAV 2.5 m/s² A(8) minutes	Time to reach ELV 5 m/s² A(8) hours	Time to reach ELV 5 m/s² A(8) minutes	Exposure duration hours	Exposure duration minutes	Partial exposure m/s² A(8)	Partial exposure points
Tool or process 1	10	200		30	2			15	1.8	50
Tool or process 2	6	72	1	23	5	33	0.5		1.5	36
Tool or process 3	3.5	25	4	5	16	20	1	30	1.5	37
Tool or process 4										
Tool or process 5										
Tool or process 6										

☑ Lock Tool or process names

Instructions for use:

Enter vibration magnitudes and exposure durations in the white areas

To calculate, press <Enter>, or move the cursor to a different cell

The results are displayed in the yellow areas

To clear all cells, click on the 'Reset' button

Tick the 'Lock tool or process name' check box to prevent 'Reset' clearing these cells

For more information, click the 'Help' button

Daily exposure m/s² A(8)	Total exposure points
2.8	123

WARNING: Exposure at or above 2.5m/s² A(8) EAV (100 points)

6.21 Exposure to UV Rays

The works if undertaken during hot weather periods and excessive rays are expected from the sun, the necessary sun blocks etc. will be available should the requirement arise.

6.22 Contaminated Land

There are no known contaminated areas within the site. During the works if any areas become suspicious of containing any contaminated materials work will cease and the event will be reported to the client's representative.

Works will not re-commence until investigations have been carried out determine the extent of the contamination if any and the required method statement and risk assessments have been compiled for any removal that may be required.

6.23 Design, Work Methods and sequences.

Although there is a master document, the site file which contains the methods of works, as each area is programmed for works, if specific addendums are required these will be compiled detailing the proposed activities and any demolition methods.

6.24 Lead & Other Materials Requiring Special Precautions

Where any hot cutting is to take place, the area used will be safely controlled, the area protected, and fire extinguishers placed in close proximity.

Demolition & Project

Prior to the commencement of any hot cutting where required by the contractors a permit will be obtained with all conditions of the permit observed throughout the task.

A fire watchman shall be situated within a prominent location during the undertaken of any hot work operations. Regular check will be carried out during the hot works process, all hot cut works will cease one hour before site closure. The watchman and site supervisor will check the area prior to leaving the site and closing the gates. Trained competent Burners shall be employed for all oxy/propane cutting. Before any hot cutting is undertaken any suspect paintwork will be tested for lead content.

6.25 Trees.

(There is no requirement for tree protection.)

SECTION 7. CLIENTS REQUIREMENTS

All normal operation of the adjacent properties must not be hindered in any way during the works and all roads, paths etc. will remain free from obstructions and debris. All vehicles entering the access/egress routes as per the existing highway will keep to the lowest speed possible ensuring it does not impede the safety constraints of the vehicle? No personnel working on the project will enter any other areas other than to discuss work procedures or any activity that may concern them.

Health & Safety File.

The health & safety file will be compiled in accordance and as listed within the pre-construction plan

A pre-start meeting will be held to discuss all aspects of the works and the requirements of the Health & Safety file under CDM 2015 regulations. The health and safety file will be compiled throughout the duration of the works

Demolition & Project Consultancy

APPENDIX ONE

TRAFFIC MANAGEMENT PLAN FOR THE SITE

170 BRIGHTON ROAD
LANCING
BN15 8LL

NOTE: THE FORMER STRUCTURE WITHIN THE FOLLOWING PHOTOS HAS BEEN DEMOLISHED AND ALL WASTE HAS BEEN CLEARED LEAVING A CLEAR SITE FOR FUTURE DEVELOPMENT, LOCATION TO THE SITE REMAINS AS TMP FOR TRAFFIC. REMOVAL OF WASTE AND DELIVERIES PROGRESS MUST FOLLOW INSTRUCTIONS WITHIN THIS DOCUMENT AND THOSE SUBMITTED BY THE CONTRACTORS TO ENSURE THAT ALL DEVELOPMENT FOR THE PROJECT CONTAINS ALL RELEVANT AND SAFETY ASPECTS TO ENSURE A SAFE WORKING PRACTICE. IS ACHIEVED.

ALL VEHICLES FOR DELIVERY/COLLECTION WILL BE MONITORED DURING THEIR WORKING TIME, APPROPRIATE SAFETY SIGNAGE AND OPERATIVES WILL BE USED TO ENSURE ALL PEDESTRIANS AND THE PUBLIC ARE SAFE DURING ANY PROGRESSION WHILST NEW BUILD IS COMPLETED.

Demolition & Project Consultancy

Construction Phase Health & Safety Plan

TMP-1. SITE LOCATION.



Demo

Construction Phase Health & Safety Plan

TMP-1A. SITE LOCATION BLOCK PLAN



Demo Emergency

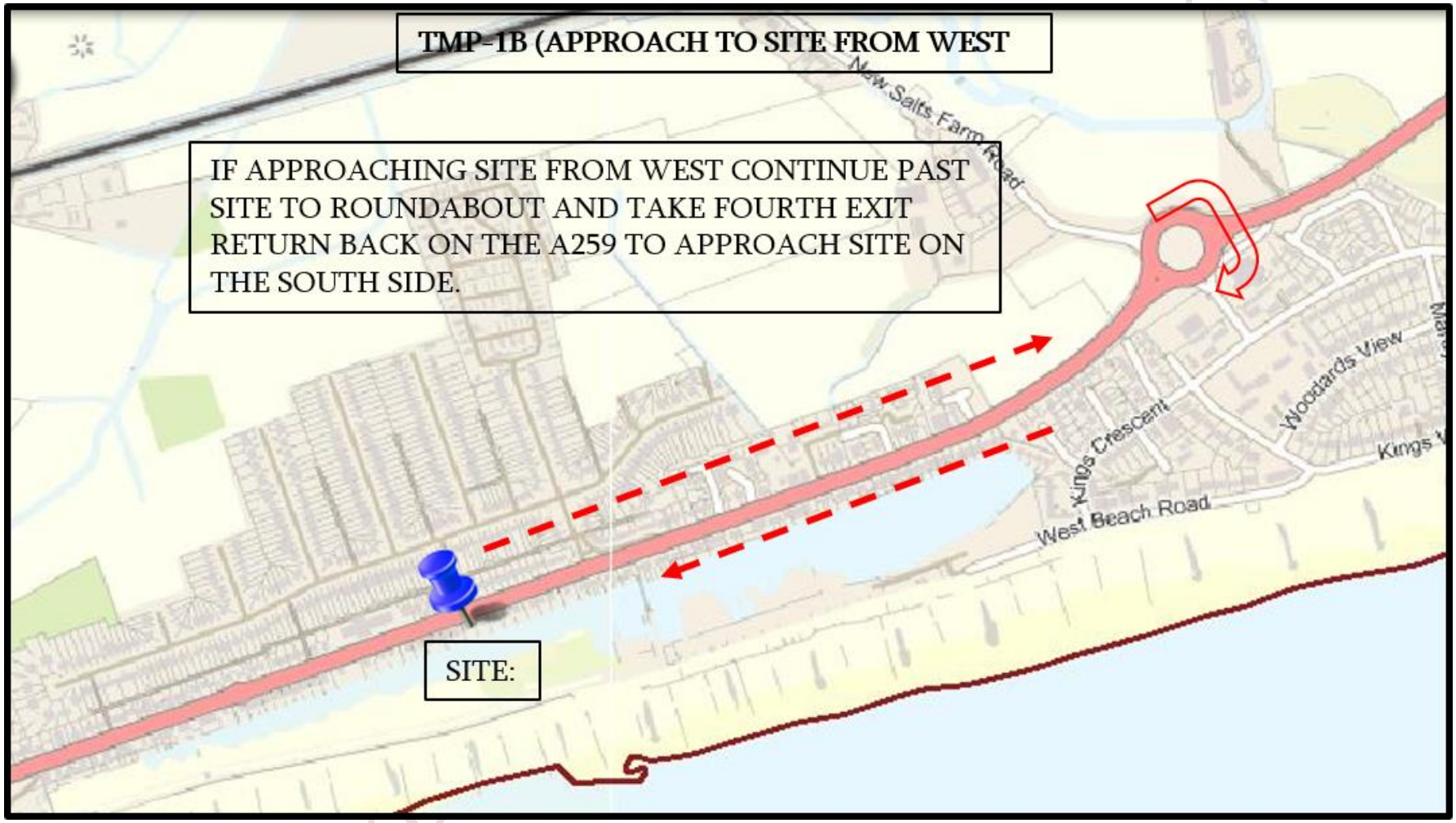
TMP-1B (APPROACH TO SITE FROM WEST
IF APPROACHING SITE FROM WEST CONTINUE PAST SITE TO ROUNDABOUT AND TAKE FOURTH EXIT RETURN BACK ON THE A259 TO APPROACH SITE ON THE SOUTH SIDE.
New Salts Farm Road
Woodards View
Kings Crescent
West Beach Road
SITE:

Demo

TMP-1C. OVERVIEW OF ROUNDABOUT



Demonstrancy

TMP-2. (3.2) WASTE/DELIVERIES

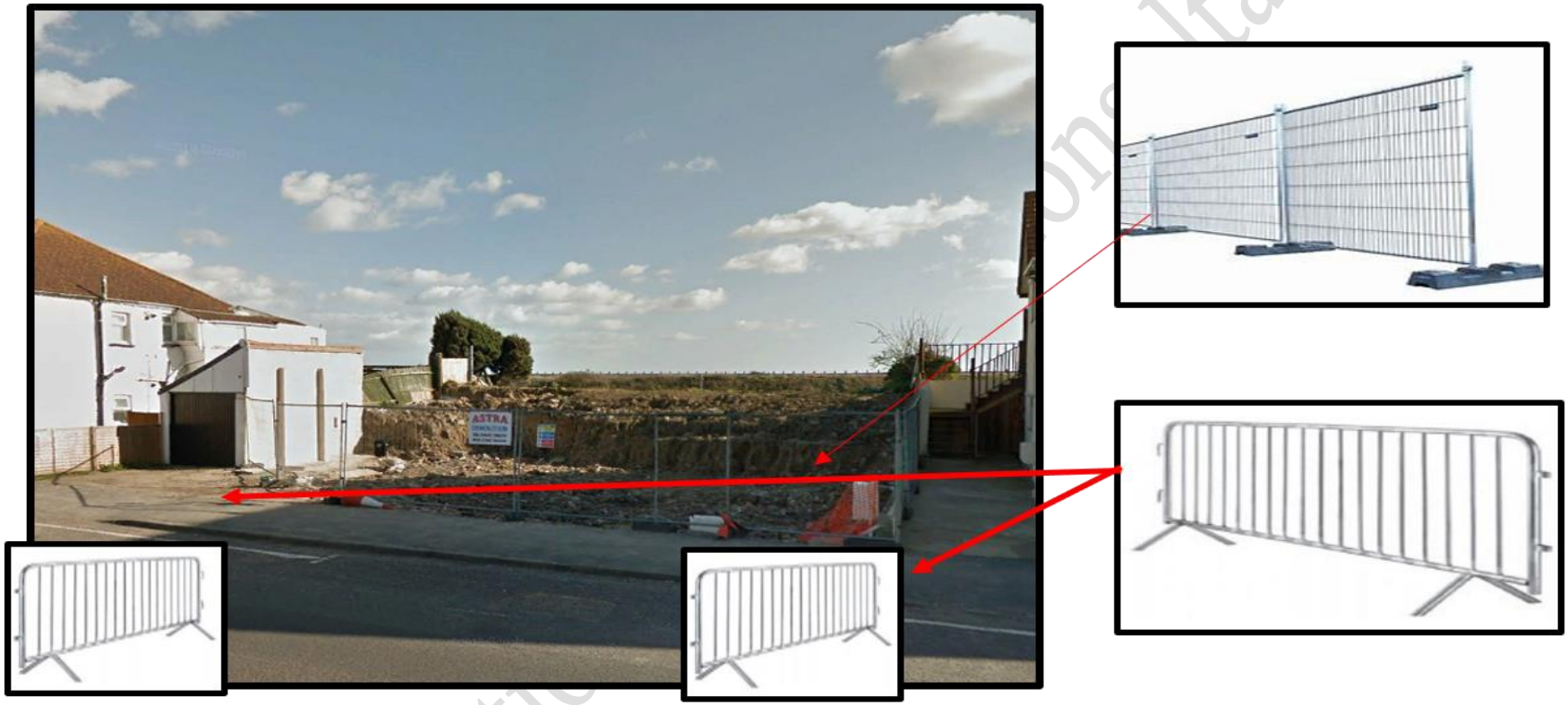

BARRIER ACROSS FOOTWAY WEST & EAST DURING ANY DELIVERIES/COLLECTIONS WITH BANKSMAN AT BOTH ENDS. AS PEDESTRIANS WISH TO CROSS THE OPERATIONS WILL CEASE, PEDESTRIANS ALLOWED TO PASS AND WHEN CLEAR CONTINUATION OF WORKS COMMENCE. HERAS FENCE PANELS ACROSS THE SITE FRONTAGE THROUGHOUT THE NEW BUILD AT ALL TIMES.

Demolition Consultancy

TMP-2. 6.1 DIMENSIONS OF HAULAGE VEHICLES FOR WASTE COLLECTION

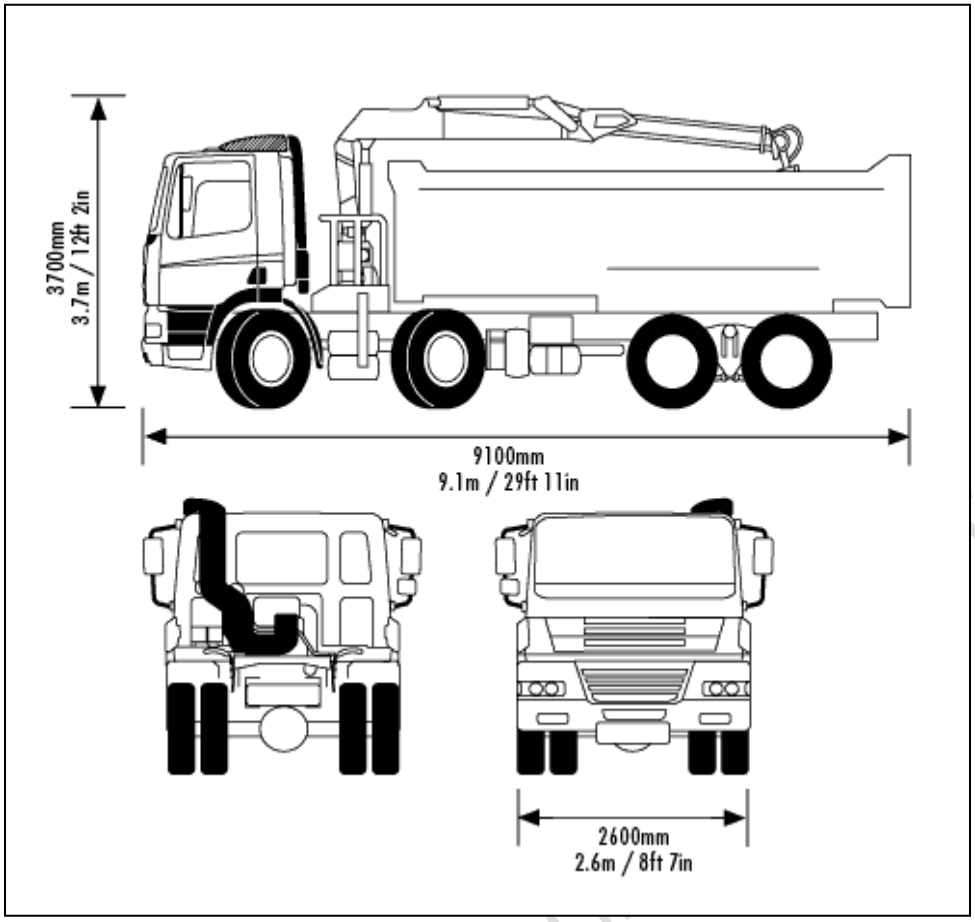

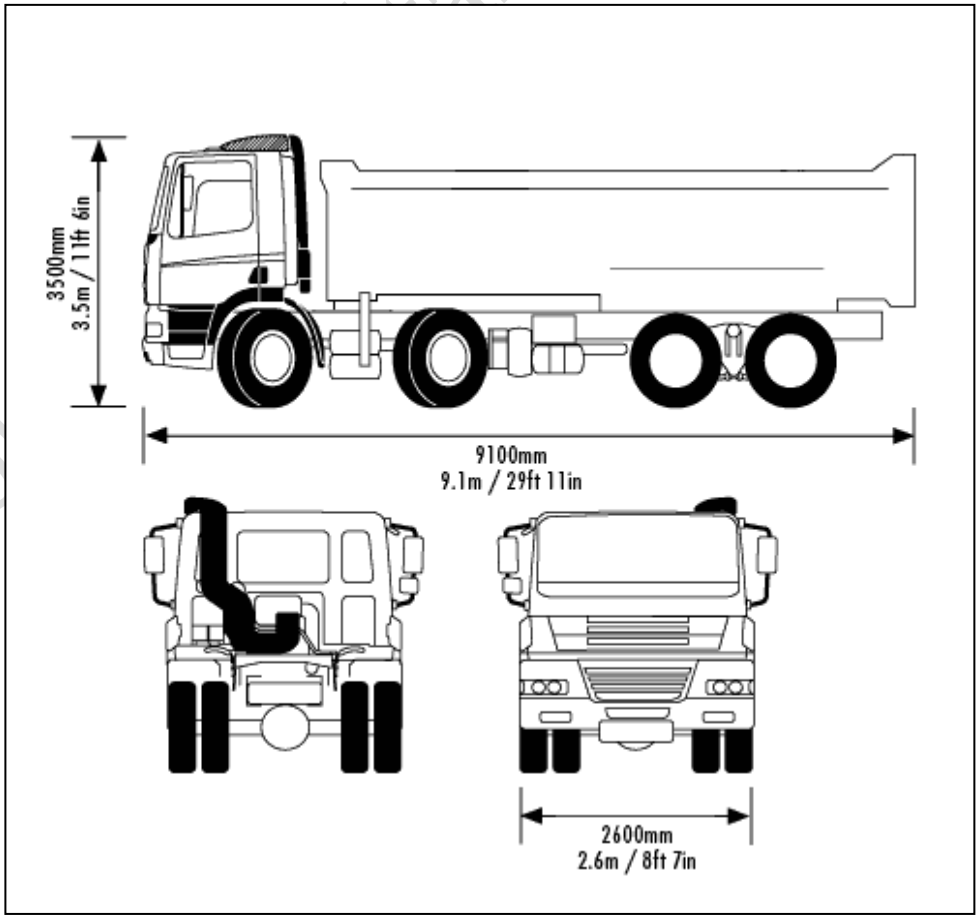

Demo